ZOSEL DAM IMPROVEMENTS
OROVILLE, WA

DESIGN DEVELOPMENT
03/08/2024

DRAWING INDEX

SHEET NUMBER	SHEET DESIGNATION	SHEET TITLE
1	G1.00	COVER SHEET
2	G1.01	GENERAL NOTES
3	G2.00	SITE PLAN
4	G2.01	CONTROL STRUCTURE PLAN
5	D1.00	DEMOLITION PLAN
6	D1.01	DEMOLITION DETAILS
7	D1.10	DEMOLITION DETAILS
8	D1.11	DEMOLITION DETAILS
9	D1.12	DEMOLITION DETAILS
10	D1.20	FISH COUNTER EQUIPMENT PLAN
11	D1.21	FISH COUNTER EQUIPMENT DETAILS
12	C1.00	BACKUP GENERATOR DETAILS
13	M1.00	CONTROL STRUCTURE GATE ARRANGEMENT
14	M2.00	GATE ASSEMBLY
15	M2.10	GATE STRUCTURE
16	M3.00	GATE HEATER GENERAL ARRANGEMENT
17	M4.00	HOIST GENERAL ARRANGEMENT
18	M4.01	HOIST ARRANGEMENT
19	M4.02	GATE HOIST SCHEMATIC
20	E0.01	ELECTRICAL LEGEND AND DRAWING INDEX
21	E0.02	ELECTRICAL ABBREVIATIONS AND GENERAL NOTES
22	E0.03	ELECTRICAL SCHEDULES
23	ED2.01	ELECTRICAL LIGHTING PLAN LEVEL 1 - DEMOLITION
24	ED2.02	ELECTRICAL LIGHTING PLAN LEVEL 2 - DEMOLITION
25	ED2.03	ELECTRICAL LIGHTING PLAN ROOF - DEMOLITION
26	ED3.02	ELECTRICAL POWER PLAN LEVEL 2 - DEMOLITION
27	ED9.01	ELECTRICAL ONE-LINE DIAGRAM - DEMOLITION
28	E2.01	ELECTRICAL LIGHTING PLAN LEVEL 1
29	E2.02	ELECTRICAL LIGHTING PLAN LEVEL 2
30	E2.03	ELECTRICAL LIGHTING PLAN ROOF
31	E3.01	ELECTRICAL POWER PLAN LEVEL 1
32	E3.02	ELECTRICAL POWER PLAN LEVEL 2
33	E9.01	ELECTRICAL ONE-LINE DIAGRAM

VICINITY MAP
NTS

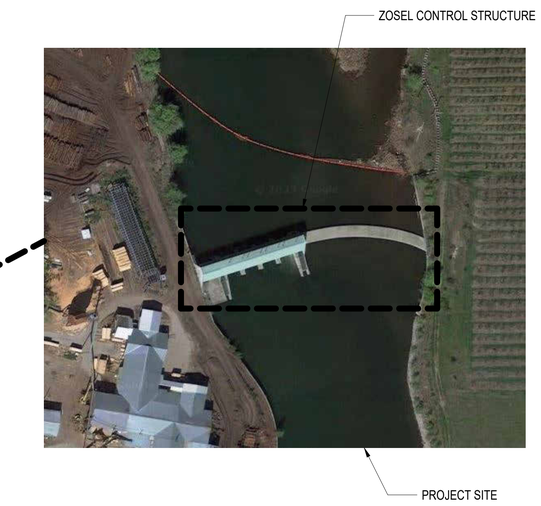

LOCATION MAP
NTS

DESIGN DEVELOPMENT - NOT FOR CONSTRUCTION

kpff
1601 Fifth Avenue, Suite 1300
Seattle, WA 98101
206.382.0600
kpff.com

NO.	DATE	BY	ISSUANCE

Washington State DEPARTMENT OF ENTERPRISE SERVICES

DEPARTMENT OF ECOLOGY State of Washington

ZOSEL DAM
OROVILLE, WA

COVER SHEET

DRAWN:	TAD	PROJECT NO.:	2300101
DESIGN:	HNS	SCALE:	
CHECKED:	DWH	DATE:	03/08/2024
DRAWING NO.	G1.00		
SHEET NO.	1 OF 33		

3/8/2024 5:38:41 PM
C:\Users\davis\Documents\2300101 Zosel Dam R23_CENTRAL_tyler.davisSN5MB.rvt

GENERAL NOTES

1. UNLESS SPECIFIED OTHERWISE, ALL MATERIAL AND EQUIPMENT INCORPORATED INTO THIS PROJECT SHALL BE NEW. CHANGES TO MATERIALS AND STRUCTURES SHOWN ON THE DRAWINGS SHALL BE SUBMITTED BY THE SUPPLIER FOR THE EXPLICIT WRITTEN APPROVAL BY THE ENGINEER. ALL MATERIALS SHALL CONFORM TO GOOD WORKMANSHIP, ACCEPTABLE INDUSTRY STANDARDS AND MANUFACTURER RECOMMNEDATIONS.
2. ALL DIMENSIONS ARE IN INCHES UNLESS OTHERWISE NOTED.
3. DRAWING SCALES ARE PROVIDED AS CONVENIENCE ONLY. THESE SCALES MAY NOT BE ACCURATE AND SHOULD NOT BE USED TO SET CRITICAL DIMENSIONS. CONTRACTOR SHALL SEEK CLARIFICAITON OF ANY CRITICAL DIMENSIONS NOT FOUND ON THE DRAWING.
4. DIMENSIONS AND ELEVATIONS OF EXISTING CONDITIONS ARE SHOWN FOR REFERENCE. THE CONTRACTOR SHALL VERIFY ALL EXISTING CONDITIONS PERTAINING TO THE INSTALLATION OF THE COMPONENTS SHOWN ON THESE DRAWINGS.
5. THE CONTRACTOR SHALL NOTIFY THE ENGINEER OF ANY DISCREPANCIES IN DIMENSIONS AND ELEVATIONS SHOWN ON THE PLANS PRIOR TO THE COMMENCEMENT OF WORK.
6. BREAK ALL SHARP CORNERS AND EDGES ON FABRICATED STRUCTURES.
7. ALL MACHINED SURFACES TO BE 125 MICROINCHES MAX ROUGHNESS UNLESS NOTED OTHERWISE.
8. DIMENSIONS AND TOELRANCES SHOWN SHALL BE INTERPRETED PER ASME Y14.5 OR AISC, AS APPLICABLE.
9. ALL STEEL STRUCTURES SHALL BE FABRICATED IN ACCORDANCE WITH THE APPROVED SHOP DRAWINGS AND REFERENCE STANDARDS.
10. TOLERANCES LISTED ON THIS SHEET APPLY TO ALL FEATURES UNLESS OTHERWISE NOTED ON THE DRAWINGS.
11. ADJUST SHOP DIMENSIONING AND TOELRANCES TO ACHIEVE LAYOUT DIMENSIONS INDICATED AND AVOID UNWORKABLE TOELRANCE STACKUPS.
12. UNLESS NOTED OTHERWISE, DIMENSIONAL TOLERANCES ARE AS FOLLOWS:

FRACTIONAL OR F-IN MORE THAN 60”	± 1/8”
FRACTIONAL OR FT-IN LESS THAN 60”	± 1/16”
DECIMAL INCHES “X.X”	± 0.06”
DECIMAL INCHES “X.XX”	± 0.03”
DECIMAL INCHES “X.XXX”	± 0.010”
DECIMAL mm	± 1.5 mm

13. UNLESS NOTED OTHERWISE, DIMENSIONS BETWEEN HOLES AND BETWEEN MACHINED SURFFACES IN A SINGLE MACHINED PART HAVE A TOLERANCE OF ± 0.010 ”. FLATNESS OF MACHINED SURFACES IS ± 0.020 ”. CLEARANCE IN HOLES FOR 3/8” BOLTS OR LARGER ARE 1/16” LARGER IN DIAMETER THAN THE BOLT. CLEARANCE IN HOLES FOR 1/4” BOLTS OR SMALLER ARE 1/32” LARGER IN DIAMETER THAN THE BOLT.
14. UNLESS NOTED OTHERWISE, TOLERANCE ON ANGULAR DIMENSIONS IS ± 0.5 DEGREES. FEATURES OF PARTS AND ASSEMBLIES THAT ARE IMPLIED AS PARALLEL OR PERPENDICUALR MUST BE PARALLEL OR PERPENDICULAR WITHIN THIS TOLERANCE.

FASTENERS

1. FASTENER SIZE AND MATERIAL SHALL BE AS SPECIFIED ON THE DRAWINGS.
2. APPLY LOCTITE 243 LIQUID OR 249 QUICKTAPE THREAD-LOCKER, OR APPROVED EQUIVALENT, TO ALL THREADED FASTENERS, UNLESS NOTED OTHERWISE. THREAD-LOCKER NOT REQUIRED ON ALIGNMENT STUDS AND NUTS OR OTHER FASTENERS THAT ARE EMBEDDED IN CONCRETE.
3. APPLY LOCTITE LB 8009 HEAVY DUTY ANTI-SEIZE OR APPROVED EUIVALENT, TO STAINLESS STEEL FASTENERS USED TO ATTACH SEAL CLAMP BARS.
4. ASSEMBLY TORQUE FOR THE SEAL CLAMP BAR FASTENERS SHALL BE PER THE SEAL MANUFACTURER ’S INSTRUCTIONS.

WELDING

1. ALL WELDERS SHALL BE QUALIFIED IN ACCORDANCE WITH AWS D1.1 AND/OR AWS D1.6 FOR THE WELD PROCEDURES AND POSITIONS TO BE PERFORMED.
2. ALL WELDS SHALL BE PERFORMED WITH PROCEDURES PRE-QUALIFIED OR QUALIFIED IN ACCORDANCE WITH AWS D1.1 OR AWS D1.6. THE FILLER WELD SHALL BE SPECIFIED IN THE WPS.
3. THE WELDS SHOWN ARE FOR THE FINAL CONNECTIONS. FIELD WELD SYMBOLS ARE SHOWN WHERE FIELD WELDS ARE REQUIRED BY THE DESIGN.
4. WELDING ELECTRODES SHALL BE 70 KSI STRENGTH AND SHALL BE LOW HYDROGEN ELECTRODES.
5. FILL FLUSH ALL FLARE BEVEL GROOVE WELDS OR AS REQUIRED.
6. ALL WELDS SHALL BE VISUALLY INSPECTED.
7. COMPLETE PENETRATION BUTT WELDLS SHALL BE TESTED ULTRASONICALLY OR BY USING ANOTHER METHOD APPROVED BY THE ENGINEER.
8. AT LEAST 10% OF EACH TYPE AND SIZE OF FILLET WELDS AND PJP GROOVE WELD SHALL BE TESTED BY MAGNETIC PARTICLE TESTING (MT) OR LIQUID PENETRANT TESTING (PT) AS APPROPRIATE.

MATERIALS

1. CARBON STEEL PLATES SHALL CONFORM TO ASTM A572 GRADE 50 OR ASTM A709 GRADE 50 UNLESS NOTED OTHERWISE.
2. CARBON STEEL SHAPES SHALL CONFORM TO ASTM A36 UNLESS NOTED OTHERWISE.
3. STAINLESS STEEL SHALL CONFORM TO ASTM A240 TYPE 304L UNLESS NOTED OTHERWISE.
4. PURCHASED STEEL MATERIALS SHALL MEEET THE REQUIREMENTS OF ASTM A6.

COATINGS

1. MASK ALL TAPPED HOLES BEFORE PAINTING.
2. APPLY PRIMER COAT ONLY TO MACHINED BORES IN GATE STRUCTURE FOR WHEEL AXLES. MASK BORES AFTER PRIMER COAT.

DESIGN DEVELOPMENT - NOT FOR CONSTRUCTION

kpff
1601 Fifth Avenue, Suite 1300
Seattle, WA 98101
206.382.0600
kpff.com

NO.	DATE	BY	ISSUANCE

Washington State DEPARTMENT OF ENTERPRISE SERVICES

DEPARTMENT OF ECOLOGY State of Washington

ZOSEL DAM
OROVILLE, WA

GENERAL NOTES

DRAWN:	TAD	PROJECT NO.:	2300101
DESIGN:	HNS	SCALE:	1/16" = 1'-0"
CHECKED:	DWH	DATE:	03/08/2024
DRAWING NO.	G1.01		
SHEET NO.	2 OF 33		

3/8/2024 5:38:43 PM
C:\Users\davis\Documents\2300101 Zosel Dam R23_CENTRAL_tyler.davisN5MB.rvt

EASEMENT NOTES:

EASEMENT DATA PER DOCUMENT "RECORD OF SURVEY FOR AQUATIC LAND EASEMENT NO. 51-A47628" (KPFF 2022).

1. 200 FOOT WIDE EASEMENT FOR RIGHT-OF-WAY FOR THE CONSTRUCTION, OPERATION, USE AND MAINTENANCE OF A WATER CONTROL STRUCTURE AS DESCRIBED IN DOCUMENT ENTITLED "STATE OF WASHINGTON DEPARTMENT OF NATURAL RESOURCES, BRIAN J. BOYLE, COMMISSIONER OF PUBLIC LANDS, OLYMPIA, WASHINGTON 98504". DOCUMENT PROVIDED BY CLIENT AND APPEARS TO BE UNRECORDED.

2. 40 FEET WIDE x 450 FEET LONG PERPETUAL EASEMENT FOR SHEET PILING AND DAM CONSTRUCTION. AS SHOWN ON EXHIBIT "A" ENTITLED "OSOYOOS LAKE CONTROL STRUCTURE, ZOSEL EASEMENTS" CONTAINED IN DOCUMENT "EASEMENTS AND PERMITS FOR CONSTRUCTION AND MAINTENANCE OF NEW ZOSEL DAM" (R5). DOCUMENT PROVIDED BY CLIENT AND APPEARS TO BE UNRECORDED. APPX LOCATION SHOWN HEREON.

3. 12 FOOT PERPETUAL ACCESS EASEMENT AS SHOWN ON EXHIBIT "A" ENTITLED "OSOYOOS LAKE CONTROL STRUCTURE, ZOSEL EASEMENTS" CONTAINED IN DOCUMENT "EASEMENTS AND PERMITS FOR CONSTRUCTION AND MAINTENANCE OF NEW ZOSEL DAM" (R5). DOCUMENT PROVIDED BY CLIENT AND APPEARS TO BE UNRECORDED. NOTE: EASEMENT IS NOT DESCRIBED IN SAID DOCUMENT AND IS ONLY SHOWN GRAPHICALLY ON SAID EXHIBIT "A". APPX LOCATION SHOWN HERON. SEE ALSO SHEET 2.

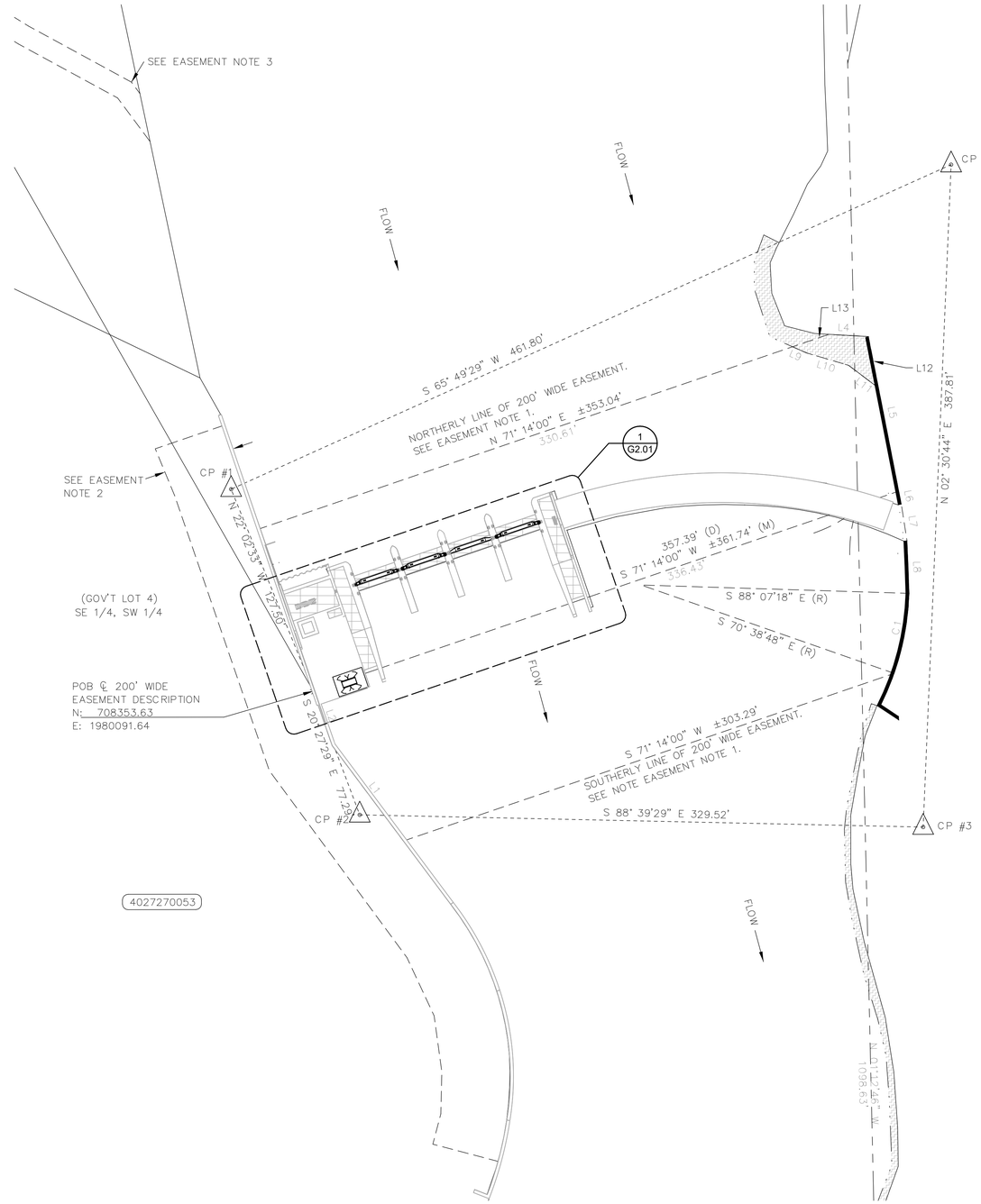

1 SITE PLAN
1" = 40'-0"

DESIGN DEVELOPMENT - NOT FOR CONSTRUCTION

kpff
1601 Fifth Avenue, Suite 1300
Seattle, WA 98101
206.382.0600
kpff.com

NO.	DATE	BY	ISSUANCE

Washington State DEPARTMENT OF ENTERPRISE SERVICES

DEPARTMENT OF ECOLOGY State of Washington

ZOSEL DAM
OROVILLE, WA

SITE PLAN

DRAWN:	TAD	PROJECT NO.:	2300101
DESIGN:	HNS	SCALE:	1" = 40'-0"
CHECKED:	DWH	DATE:	03/08/2024
DRAWING NO.	G2.00		
SHEET NO.	3	OF	33

3/8/2024 5:38:45 PM
C:\Users\davis\Documents\2300101 Zosel Dam R23_CENTRAL_tyler.davisSN5MB.rvt

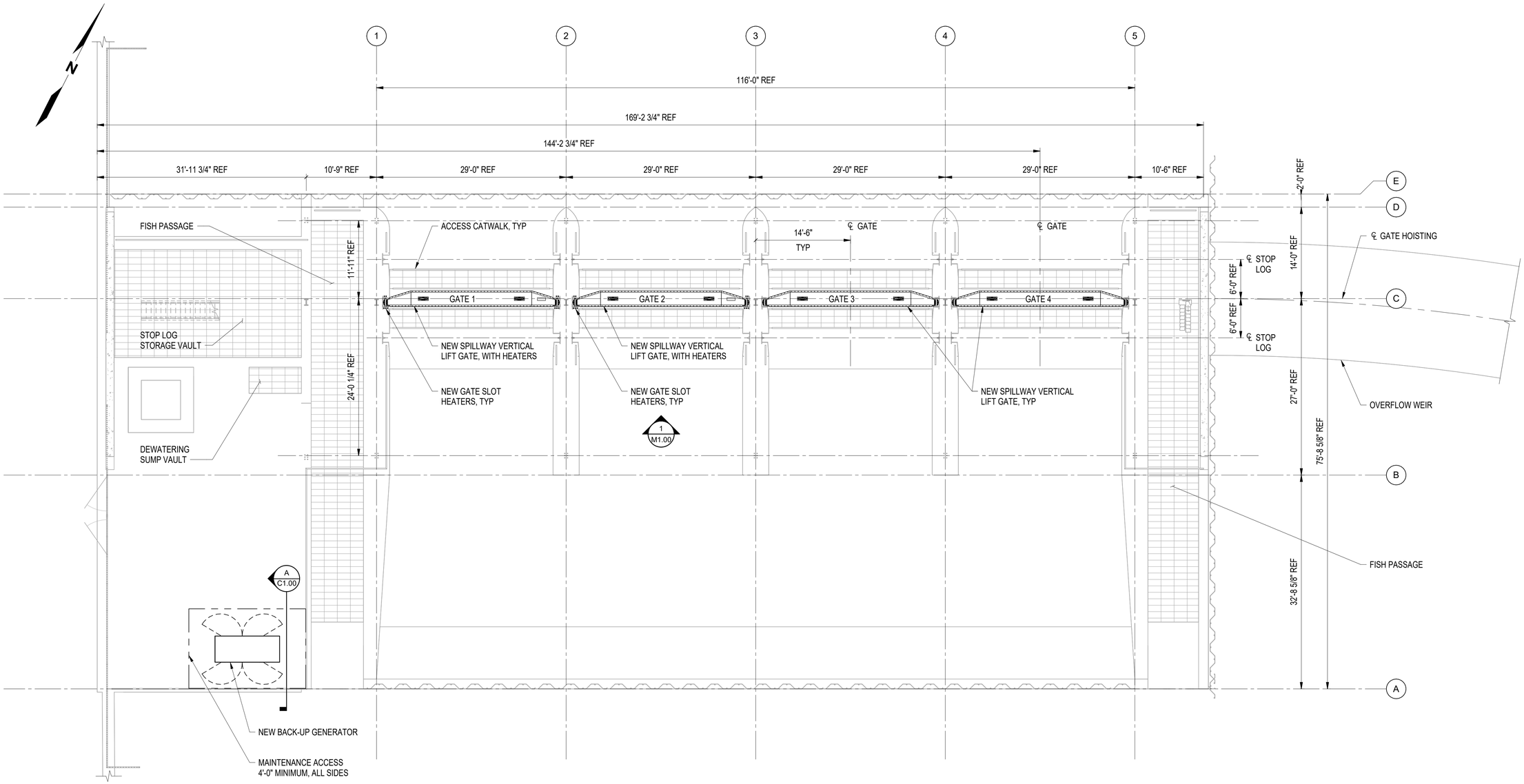

1 G2.00 CONTROL STRUCTURE PLAN AT EL 913.0'

1/8" = 1'-0"

DESIGN DEVELOPMENT - NOT FOR CONSTRUCTION

3/8/2024 5:38:47 PM
C:\Users\tdavis\Documents\2300101 Zosel Dam R23_CENTRAL_tyler.davisSN5MB.rvt

kpff
1601 Fifth Avenue, Suite 1300
Seattle, WA 98101
206.382.0600
kpff.com

NO.	DATE	BY	ISSUANCE

DES Washington State DEPARTMENT OF ENTERPRISE SERVICES

DEPARTMENT OF ECOLOGY State of Washington

ZOSEL DAM
OROVILLE, WA

CONTROL STRUCTURE PLAN

DRAWN:	TAD	PROJECT NO.:	2300101
DESIGN:	HNS	SCALE:	1/8" = 1'-0"
CHECKED:	DWH	DATE:	03/08/2024
DRAWING NO.	G2.01		
SHEET NO.	4 OF 33		

DEMOLITION AND PHASING NOTES:

1. CONTRACTOR SHALL PROTECT ALL ITEMS NOT IDENTIFIED TO BE DEMOLISHED.
2. CONTROL STRUCTURE FACILITY SHALL REMAIN OPERATIONAL THROUGHOUT CONSTRUCTION. CONTRACTOR MUST MAINTAIN THE MINIMAL NUMBER OF GATES IN SERVICE AT A GIVEN TIME OF THE YEAR IN ORDER TO MAINTAIN OPERATIONAL STATUS OF THE DAM. OPERATIONAL GATE REQUIREMENTS ARE STATED IN PROJECT BASIS OF DESIGN
3. DEMOLITION OF EXISTING EQUIPMENT THAT AFFECTS CONTROL STRUCTURE HOIST DECK ENCLOSURES, INCLUDING BUT NOT LIMITED TO FLOOR AND ROOFING, SHALL BE REPAIRED.
4. DEMO EXISTING GATE HEATERS, GATE SLOT HEATERS, AND GATE HEATER CONTROL. EXISTING HEATING EQUIPMENT LOCATED ONLY AT GATE BAY #1.

LEGEND:

EXISTING ELEMENTS

ELEMENTS TO BE DEMOLISHED

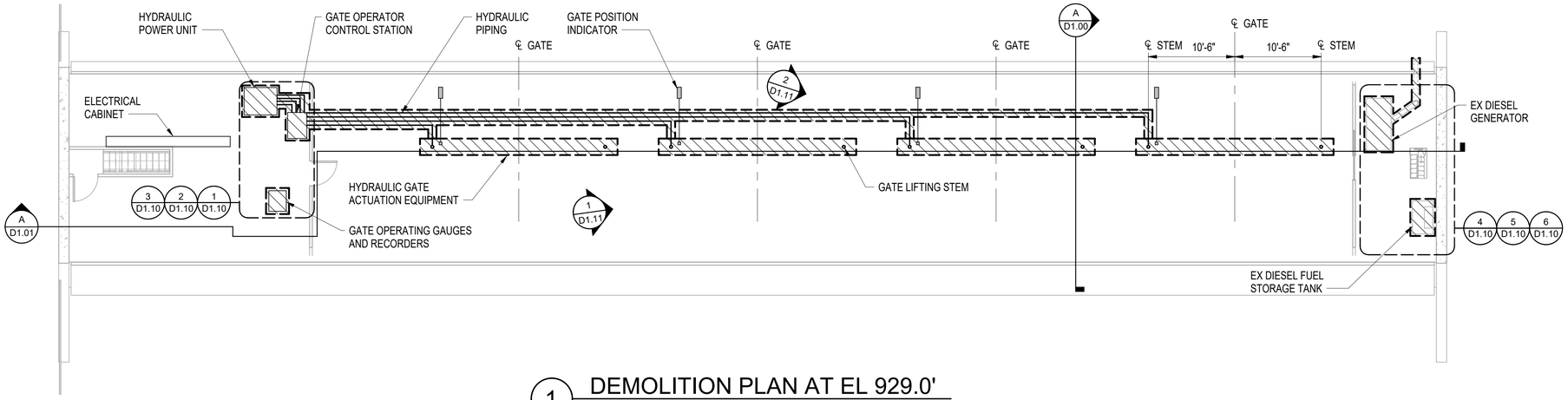

1 DEMOLITION PLAN AT EL 929.0'
1/8" = 1'-0"

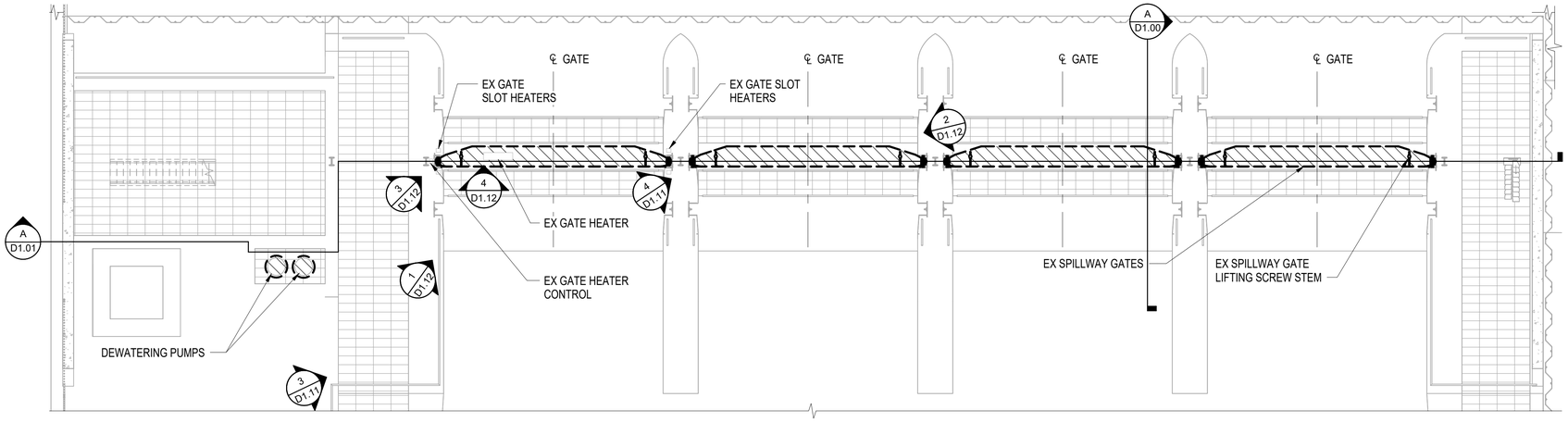

2 DEMOLITION PLAN AT EL 918.0'
1/8" = 1'-0"

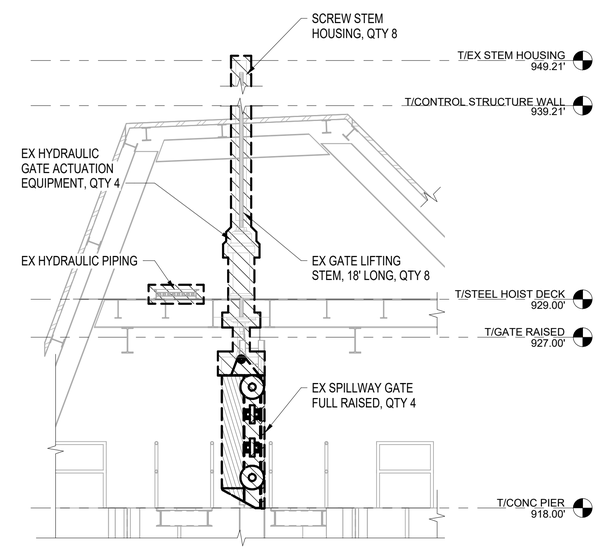

A D1.00 SECTION
1/4" = 1'-0"

DESIGN DEVELOPMENT - NOT FOR CONSTRUCTION

kpff
1601 Fifth Avenue, Suite 1300
Seattle, WA 98101
206.382.0600
kpff.com

NO.	DATE	BY	ISSUANCE

DES Washington State DEPARTMENT OF ENTERPRISE SERVICES

DEPARTMENT OF ECOLOGY State of Washington

ZOSEL DAM
OROVILLE, WA

DEMOLITION PLAN

DRAWN:	TAD	PROJECT NO.:	2300101
DESIGN:	HNS	SCALE:	As indicated
CHECKED:	DWH	DATE:	03/08/2024
DRAWING NO.	D1.00		
SHEET NO.	5 OF 33		

3/8/2024 5:38:50 PM
C:\Users\davis\Documents\2300101 Zosel Dam R23_CENTRAL_tyler.davisSN5MB.rvt

LEGEND:

EXISTING ELEMENTS

ELEMENTS TO BE DEMOLISHED

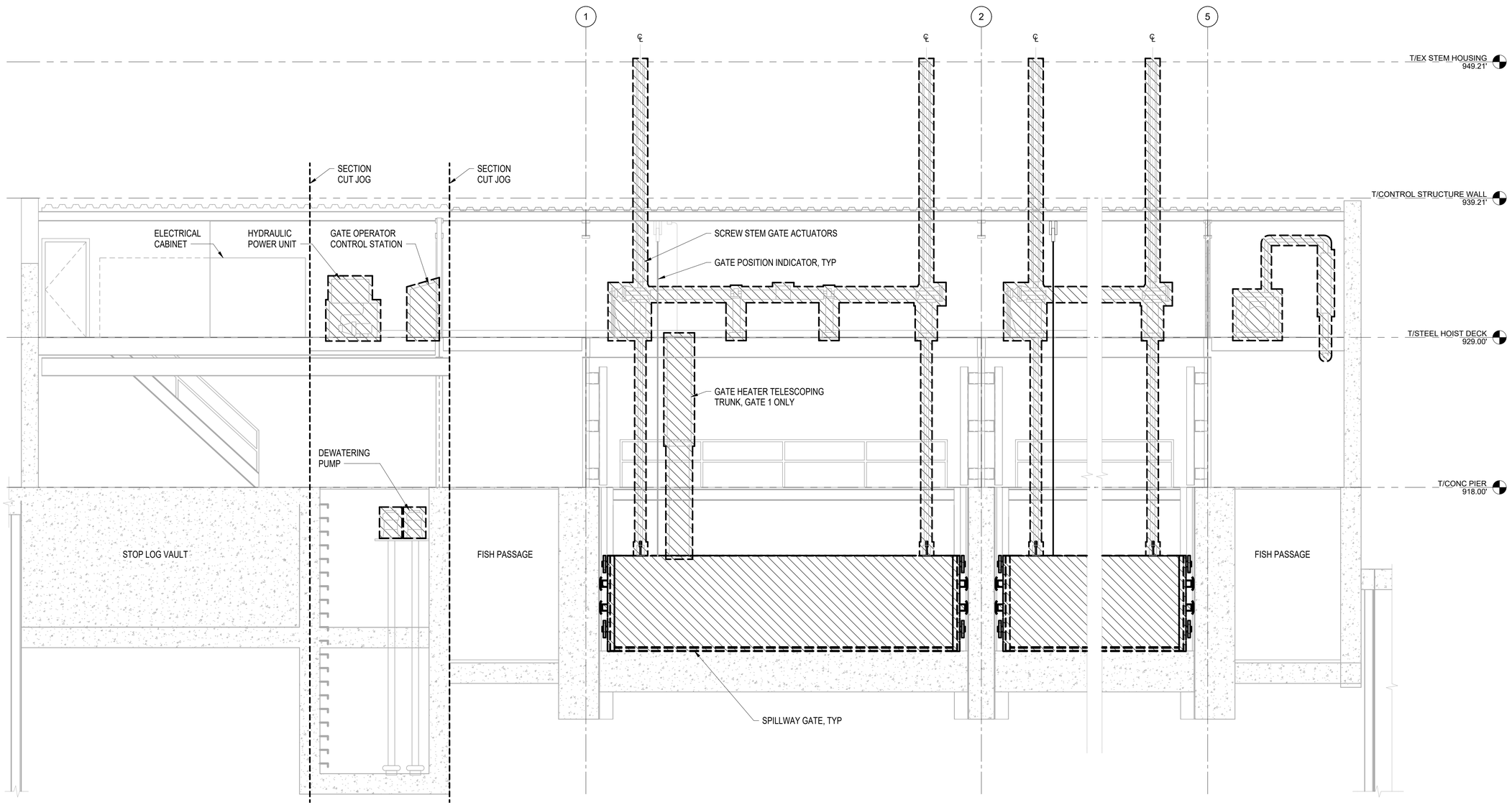

A / D1.00 DEMOLITION SECTION

1/4" = 1'-0"

DESIGN DEVELOPMENT - NOT FOR CONSTRUCTION

kpff

1601 Fifth Avenue, Suite 1300
Seattle, WA 98101
206.382.0600
kpff.com

NO.	DATE	BY	ISSUANCE

DES Washington State DEPARTMENT OF ENTERPRISE SERVICES

DEPARTMENT OF ECOLOGY State of Washington

ZOSEL DAM
OROVILLE, WA

DEMOLITION DETAILS

DRAWN:	TAD	PROJECT NO.:	2300101
DESIGN:	HNS	SCALE:	1/4" = 1'-0"
CHECKED:	DWH	DATE:	03/08/2024
DRAWING NO.		**D1.01**	
SHEET NO.	6	OF	33

3/8/2024 5:38:52 PM
C:\Users\tdavis\Documents\2300101 Zosel Dam R23_CENTRAL_tyler.davisSN5MB.rvt

DEMO HYDRAULIC POWER UNIT, SEE D1.00 NOTE 2

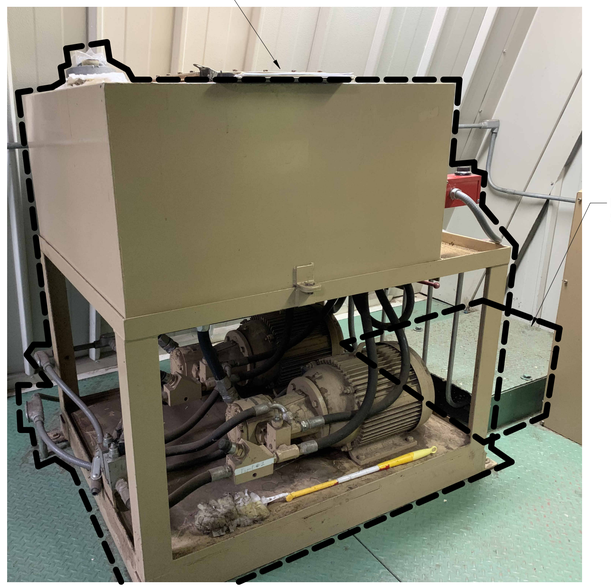

DEMO HYDRAULIC PIPING, SEE D1.00 NOTE 2

1 D1.00 GATE HPU DEMOLITION

DEMO OPERATOR CONTROL STATION, SEE D1.00 NOTE 2

DEMO HYDRAULIC PIPING, SEE D1.00 NOTE 2

2 D1.00 GATE OPERATOR DEMOLITION

DEMO GATE OPERATING GAUGES AND RECORDERS

3 D1.00 GATE GAUGES DEMOLITION

DEMO BACKUP GENERATOR

4 D1.00 BACKUP GENERATOR DEMOLITION

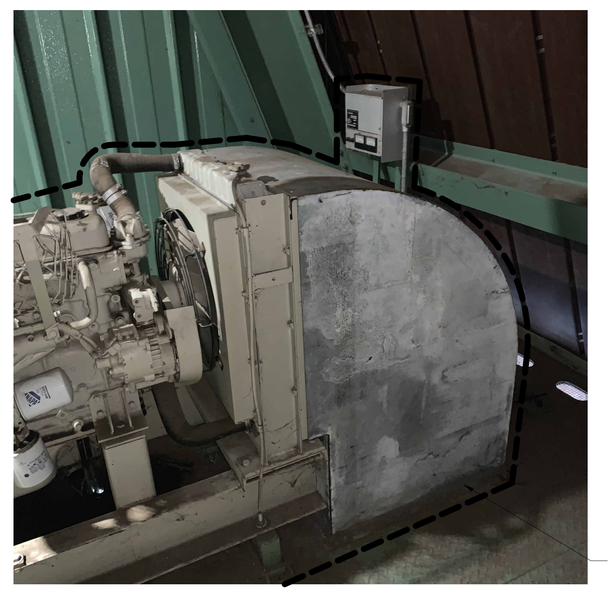

DEMO BACKUP GENERATOR ACCESSORIES

5 D1.00 BACKUP GENERATOR DEMOLITION

DEMO BACKUP GENERATOR DIESEL FUEL TANK

6 D1.00 BACKUP GENERATOR DEMOLITION

DESIGN DEVELOPMENT - NOT FOR CONSTRUCTION

kpff
1601 Fifth Avenue, Suite 1300
Seattle, WA 98101
206.382.0600
kpff.com

NO.	DATE	BY	ISSUANCE

Washington State DEPARTMENT OF ENTERPRISE SERVICES

DEPARTMENT OF ECOLOGY State of Washington

ZOSEL DAM
OROVILLE, WA

DEMOLITION DETAILS

DRAWN:	TAD	PROJECT NO.:	2300101
DESIGN:	HNS	SCALE:	1" = 80'-0"
CHECKED:	DWH	DATE:	03/08/2024
DRAWING NO.	D1.10		
SHEET NO.	7 OF 33		

3/8/2024 5:38:54 PM
C:\Users\tdavis\Documents\2300101 Zosel Dam R23_CENTRAL_tyler.davisSN5MB.rvt

1 D1.00 GATE OPERATING EQUIPMENT DEMOLITION

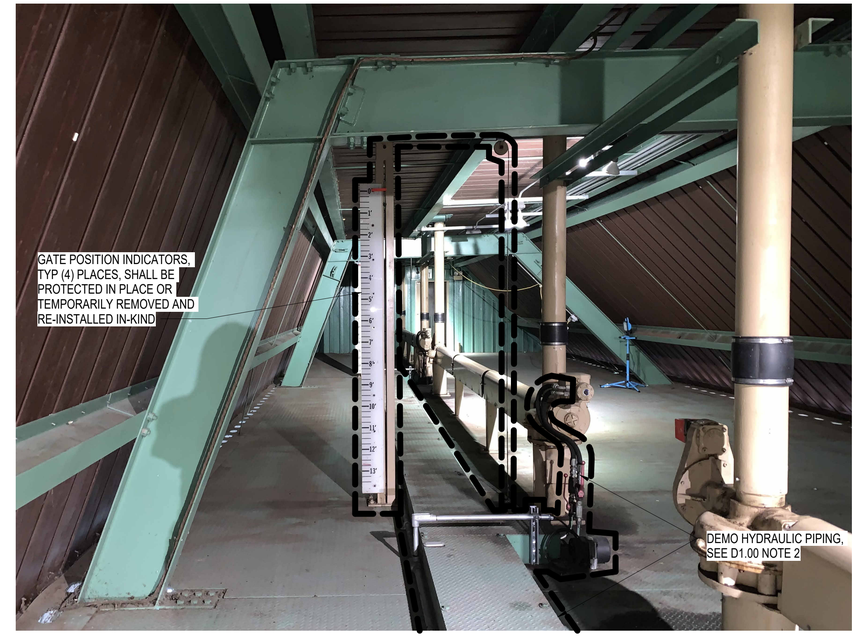

2 D1.00 GATE OPERATING EQUIPMENT DEMOLITION

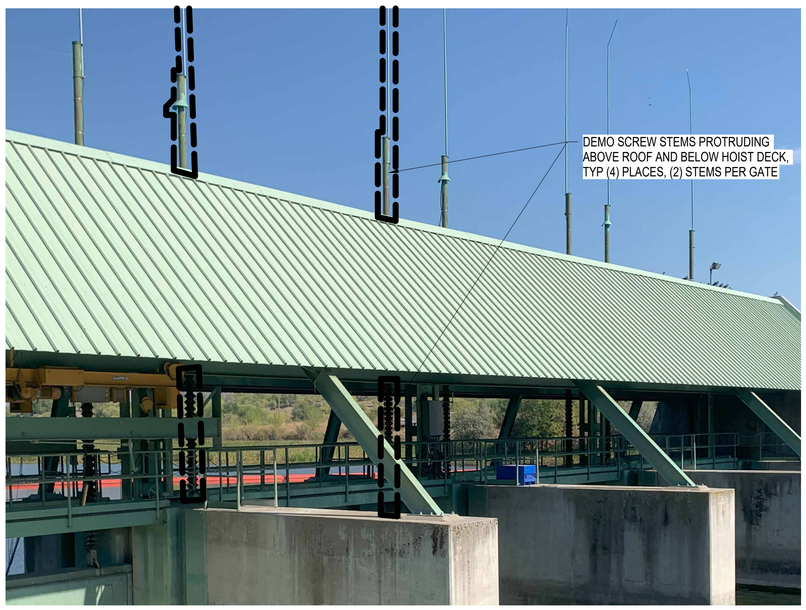

3 D1.00 GATE OPERATING EQUIPMENT DEMOLITION

4 D1.00 GATE OPERATING EQUIPMENT DEMOLITION

DESIGN DEVELOPMENT - NOT FOR CONSTRUCTION

kpff
1601 Fifth Avenue, Suite 1300
Seattle, WA 98101
206.382.0600
kpff.com

NO.	DATE	BY	ISSUANCE

DES Washington State DEPARTMENT OF ENTERPRISE SERVICES

DEPARTMENT OF ECOLOGY State of Washington

ZOSEL DAM
OROVILLE, WA

DEMOLITION DETAILS

DRAWN:	TAD	PROJECT NO.:	2300101
DESIGN:	HNS	SCALE:	As indicated
CHECKED:	DWH	DATE:	03/08/2024
DRAWING NO.	**D1.11**		
SHEET NO.	**8** OF **33**		

3/8/2024 5:38:56 PM
C:\Users\tdavis\Documents\2300101 Zosel Dam R23_CENTRAL_tyler.davisSN5MB.rvt

DEMO SPILLWAY GATES, SEE D1.00 NOTE 2

1 D1.00 GATE DEMOLITION

DEMO SPILLWAY GATES, SEE D1.00 NOTE 2

2 D1.00 GATE DEMOLITION

DEMO GATE HEATERS AND TELESCOPING TRUNK, GATE #1 ONLY

DEMO GATE SLOT HEATERS, GATE #1 ONLY, TYP BOTH SIDES OF GATE

3 D1.00 GATE HEATER DEMOLITION

DEMO GATE HEATERS AND TELESCOPING TRUNK, GATE #1 ONLY

GATE POSITION INDICATOR CABLE, TO BE PROTECTED AND RE-INSTALLED IN-KIND ON NEW SPILLWAY GATES

4 D1.00 GATE HEATER DEMOLITION

DESIGN DEVELOPMENT - NOT FOR CONSTRUCTION

kpff
1601 Fifth Avenue, Suite 1300
Seattle, WA 98101
206.382.0600
kpff.com

NO.	DATE	BY	ISSUANCE

DES Washington State DEPARTMENT OF ENTERPRISE SERVICES

DEPARTMENT OF ECOLOGY State of Washington

ZOSEL DAM
OROVILLE, WA

DEMOLITION DETAILS

DRAWN:	TAD	PROJECT NO.:	2300101
DESIGN:	HNS	SCALE:	1" = 80'-0"
CHECKED:	DWH	DATE:	03/08/2024
DRAWING NO.	D1.12		
SHEET NO.	9 OF 33		

3/8/2024 5:38:58 PM
C:\Users\davis\Documents\2300101 Zosel Dam R23_CENTRAL_tyler.davisN5MB.rvt

CONSTRUCTION AND PHASING NOTES:

1. FISH COUNTER EQUIPMENT SHALL BE PROTECTED IN PLACE OR TEMPORARILY REMOVED AND RE-INSTALLED IN-KIND

LEGEND:

EXISTING ELEMENTS

ELEMENTS TO BE DEMOLISHED

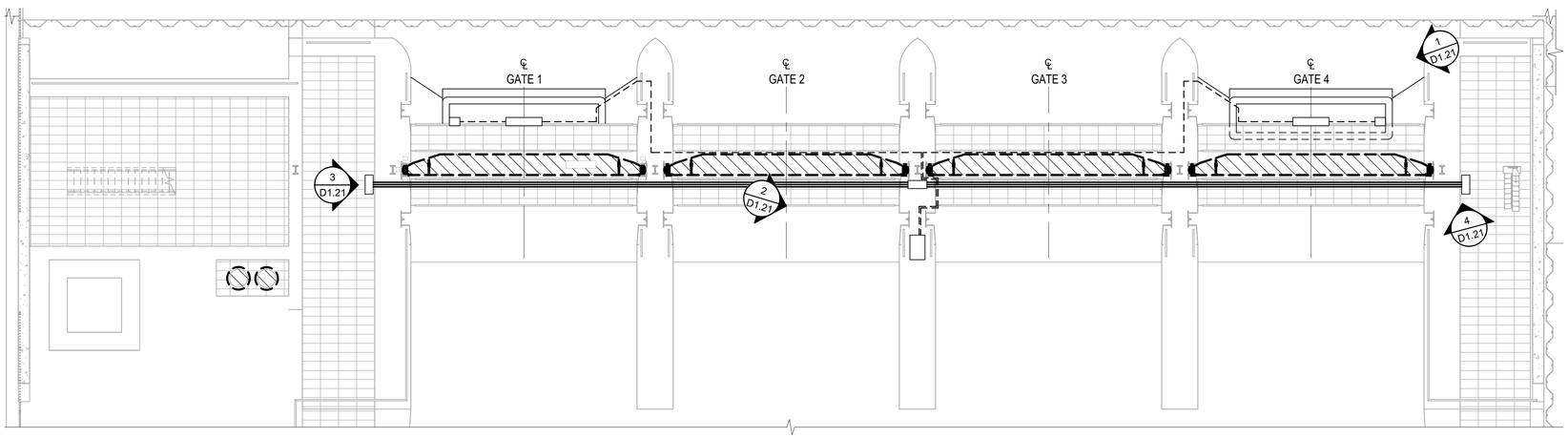

1 FISH COUNTER PLAN AT EL 918.0'

1/8" = 1'-0"

DESIGN DEVELOPMENT - NOT FOR CONSTRUCTION

3/8/2024 5:39:00 PM
C:\Users\davis\Documents\2300101 Zosel Dam R23_CENTRAL_tyler.davisSN5MB.rvt

kpff
1601 Fifth Avenue, Suite 1300
Seattle, WA 98101
206.382.0600
kpff.com

NO.	DATE	BY	ISSUANCE

DES Washington State DEPARTMENT OF ENTERPRISE SERVICES

DEPARTMENT OF ECOLOGY State of Washington

ZOSEL DAM
OROVILLE, WA

FISH COUNTER EQUIPMENT PLAN

DRAWN:	TAD	PROJECT NO.:	2300101
DESIGN:	HNS	SCALE:	As indicated
CHECKED:	DWH	DATE:	03/08/2024
DRAWING NO.	D1.20		
SHEET NO.	10	OF	33

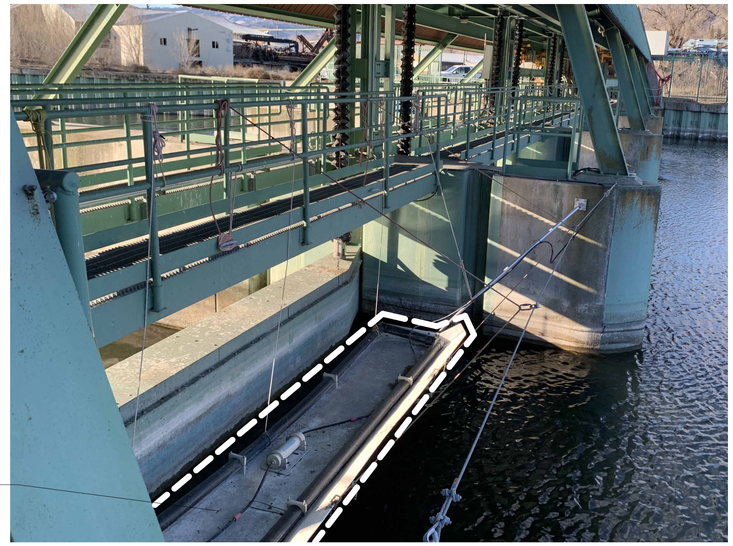

1 D1.20 FISH COUNTER EQUIPMENT PROTECTION

2 D1.20 FISH COUNTER EQUIPMENT PROTECTION

3 D1.20 FISH COUNTER EQUIPMENT PROTECTION

4 D1.20 FISH COUNTER EQUIPMENT PROTECTION

DESIGN DEVELOPMENT - NOT FOR CONSTRUCTION

kpff
1601 Fifth Avenue, Suite 1300
Seattle, WA 98101
206.382.0600
kpff.com

NO.	DATE	BY	ISSUANCE

Washington State DEPARTMENT OF ENTERPRISE SERVICES

DEPARTMENT OF ECOLOGY State of Washington

ZOSEL DAM
OROVILLE, WA

FISH COUNTER EQUIPMENT DETAILS

DRAWN:	TAD	PROJECT NO.:	2300101
DESIGN:	HNS	SCALE:	1" = 80'-0"
CHECKED:	DWH	DATE:	03/08/2024
DRAWING NO.	D1.21		
SHEET NO.	11 OF 33		

3/8/2024 5:39:02 PM
C:\Users\davis\Documents\2300101 Zosel Dam R23_CENTRAL_tyler.davisSN5MB.rvt

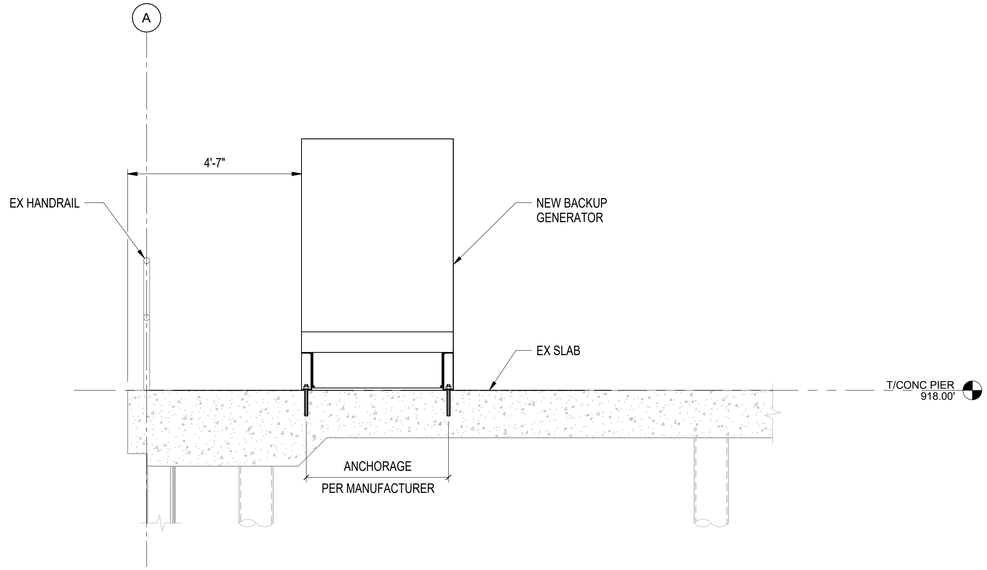

A / G2.01 **SECTION**
1/2" = 1'-0"

DESIGN DEVELOPMENT - NOT FOR CONSTRUCTION

kpff
1601 Fifth Avenue, Suite 1300
Seattle, WA 98101
206.382.0600
kpff.com

NO.	DATE	BY	ISSUANCE

Washington State DEPARTMENT OF ENTERPRISE SERVICES

DEPARTMENT OF ECOLOGY State of Washington

ZOSEL DAM
OROVILLE, WA

BACKUP GENERATOR DETAILS

DRAWN:	TAD	PROJECT NO.:	2300101
DESIGN:	HNS	SCALE:	1/2" = 1'-0"
CHECKED:	DWH	DATE:	03/08/2024
DRAWING NO.	**C1.00**		
SHEET NO.	**12** OF **33**		

3/8/2024 5:39:04 PM
C:\Users\tdavis\Documents\2300101 Zosel Dam R23_CENTRAL_tyler.davisN5MB.rvt

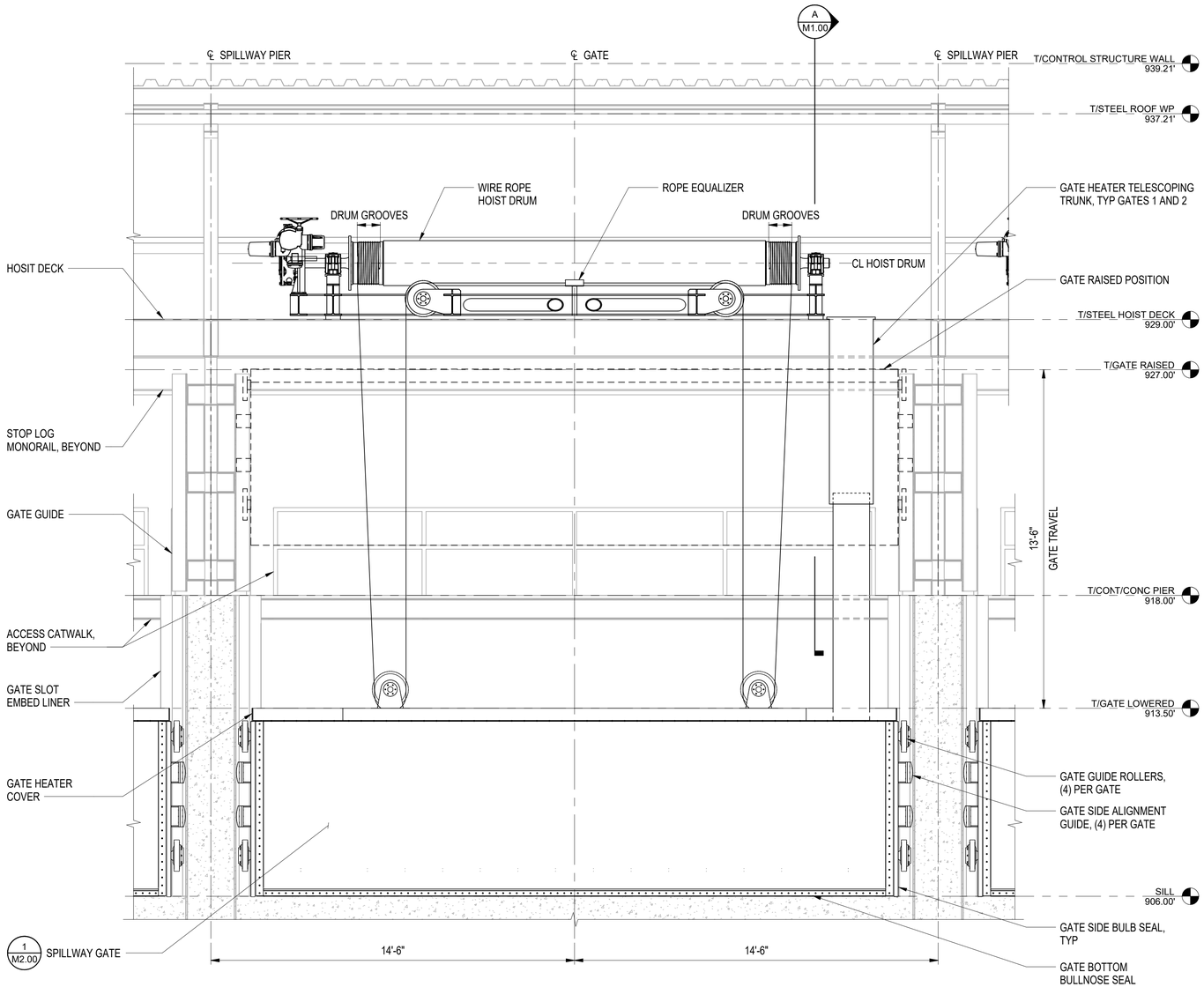

1 G2.01 GATE ARRANGEMENT

3/8" = 1'-0"
LOOKING UPSTREAM, GATE LOWERED

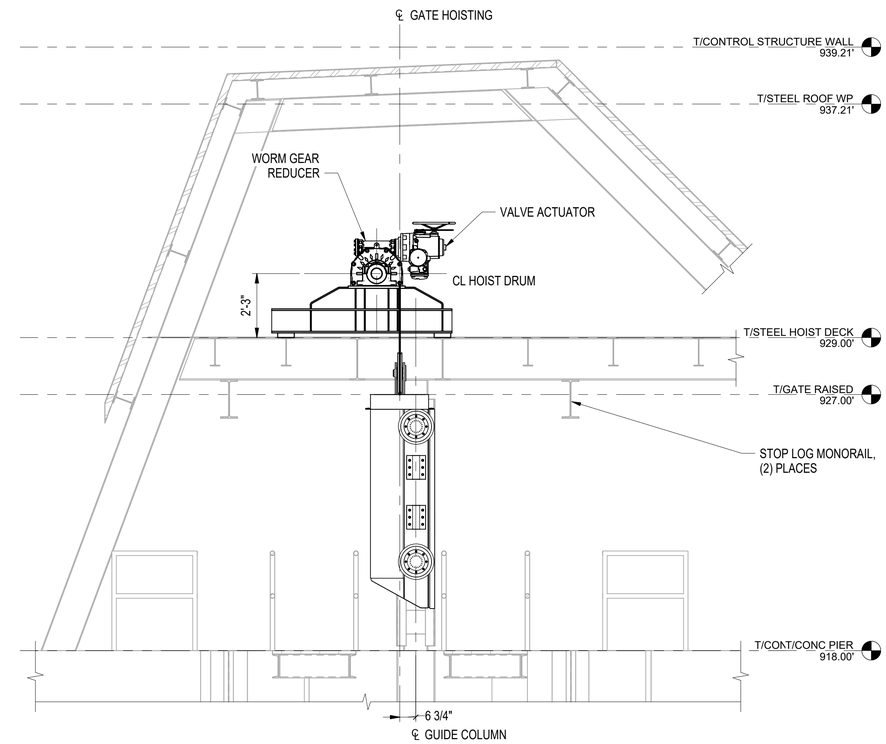

A GATE ARRANGEMENT SECTION

3/8" = 1'-0"
GATE RAISED

DESIGN DEVELOPMENT - NOT FOR CONSTRUCTION

kpff
1601 Fifth Avenue, Suite 1300
Seattle, WA 98101
206.382.0600
kpff.com

NO.	DATE	BY	ISSUANCE

Washington State DEPARTMENT OF ENTERPRISE SERVICES

DEPARTMENT OF ECOLOGY State of Washington

ZOSEL DAM
OROVILLE, WA

CONTROL STRUCTURE GATE ARRANGEMENT

DRAWN:	TAD	PROJECT NO.:	2300101
DESIGN:	HNS	SCALE:	3/8" = 1'-0"
CHECKED:	DWH	DATE:	03/08/2024
DRAWING NO.	M1.00		
SHEET NO.	13 OF 33		

3/8/2024 5:39:07 PM
C:\Users\davis\Documents\2300101 Zosel Dam R23_CENTRAL_tyler.davisSN5MB.rvt

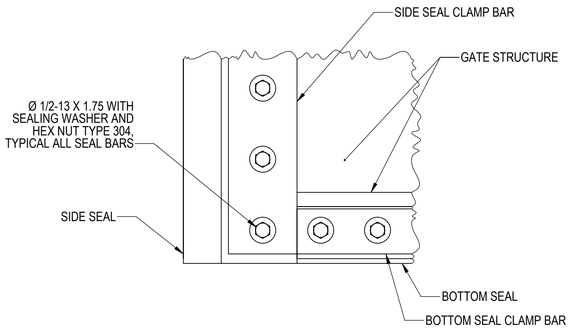

1 / - **DETAIL**
SCALE: 3" = 1'-0"

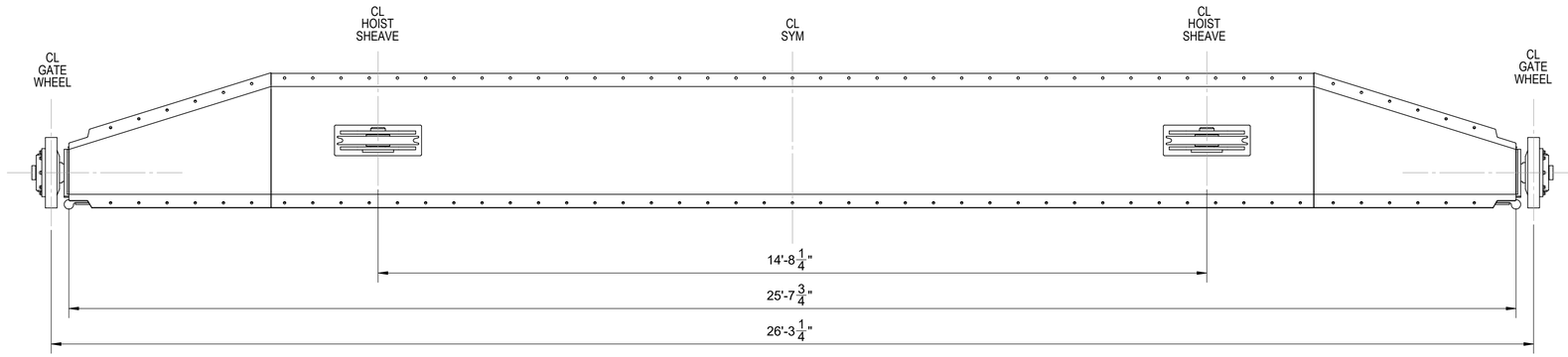

A / - **VIEW**
SCALE: 3/4" = 1'-0"

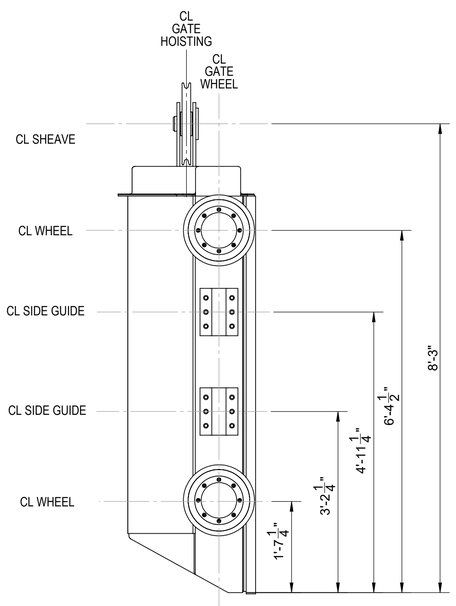

B / - **VIEW**
SCALE: 3/4" = 1'-0"

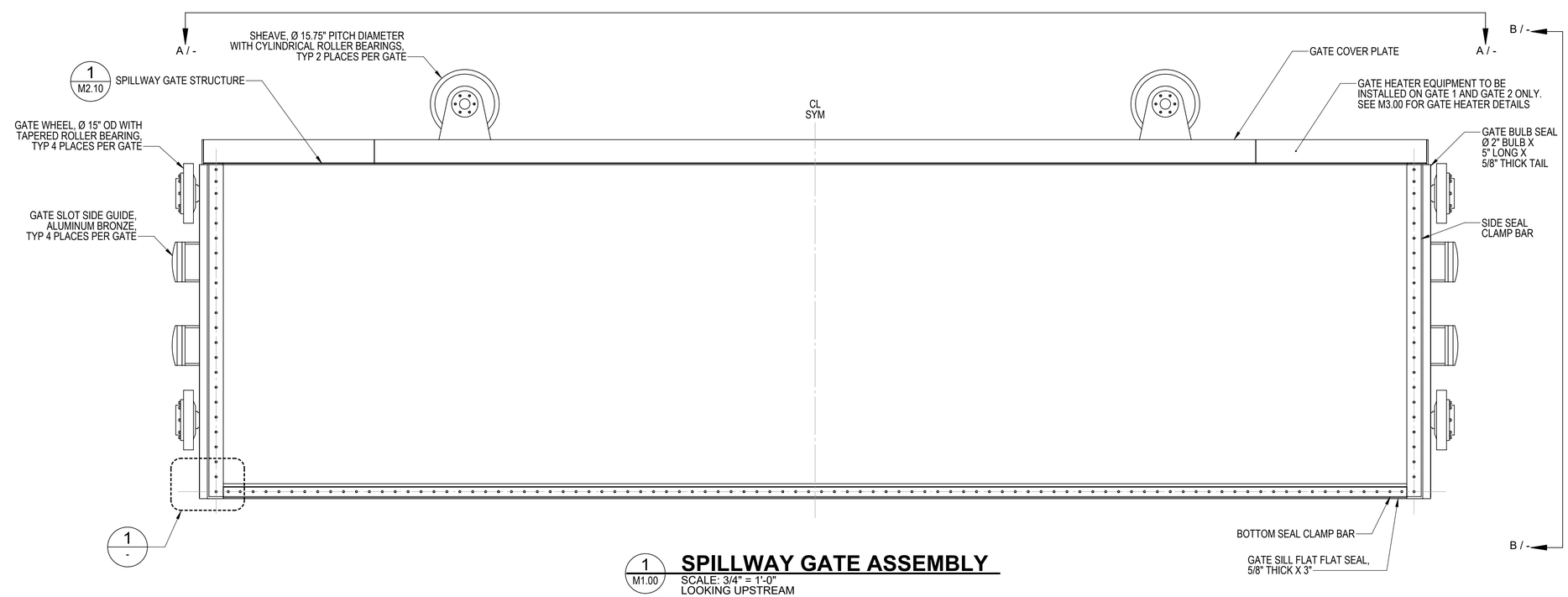

1 / M1.00 **SPILLWAY GATE ASSEMBLY**
SCALE: 3/4" = 1'-0"
LOOKING UPSTREAM

DESIGN DEVELOPMENT - NOT FOR CONSTRUCTION

3/8/2024 10:25:14 AM
X:\2023\1018230010 1 Zosel Dam\6.02 Solidworks\Current\01 DRAWINGS\M2.00 Gate Assembly

kpff
1601 Fifth Avenue, Suite 1300
Seattle, WA 98101
206.382.0600
kpff.com

NO.	DATE	BY	ISSUANCE

DES Washington State DEPARTMENT OF ENTERPRISE SERVICES

DEPARTMENT OF ECOLOGY State of Washington

ZOSEL DAM
OROVILLE, WA

GATE ASSEMBLY

DRAWN:	ADA	PROJECT NO.:	2300101
DESIGN:	HNS	SCALE:	
CHECKED:	DWH	DATE:	03/08/2024
DRAWING NO.	M2.00		
SHEET NO.	14 OF 33		

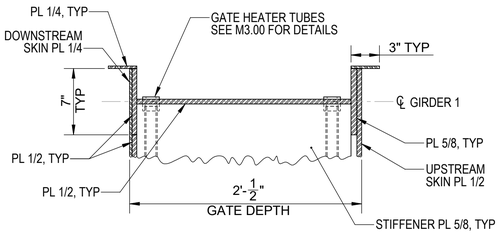

D - **DETAIL**
SCALE: 1 1/2" = 1'-0"

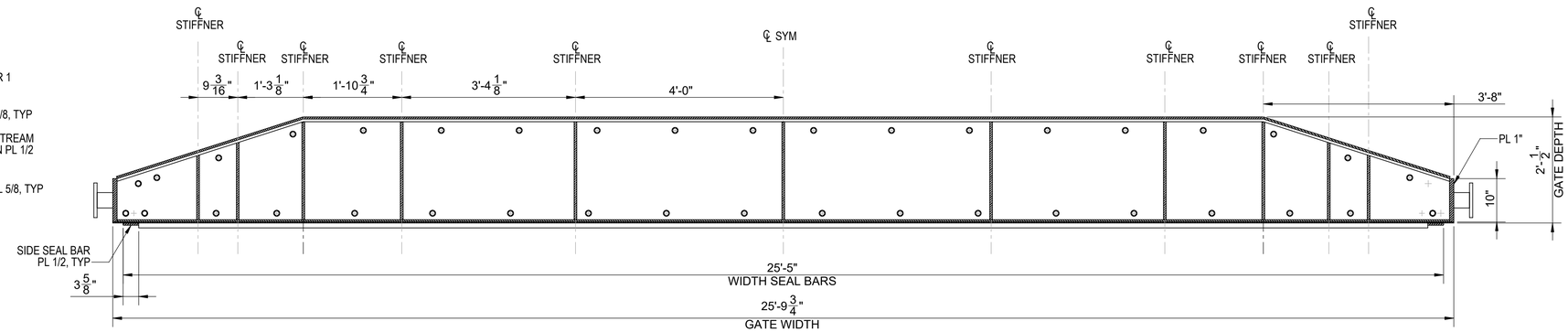

B - **SECTION**
SCALE: 3/4" = 1'-0"

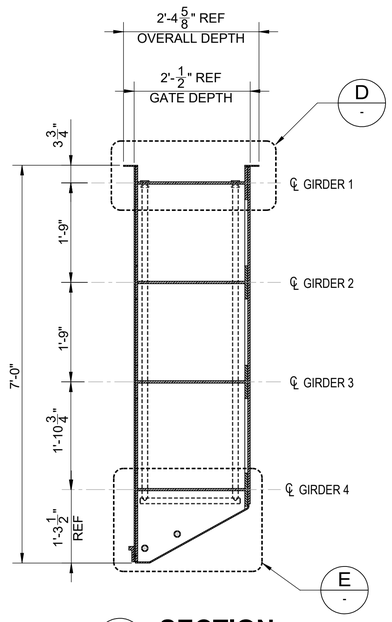

A - **SECTION**
SCALE: 3/4" = 1'-0"

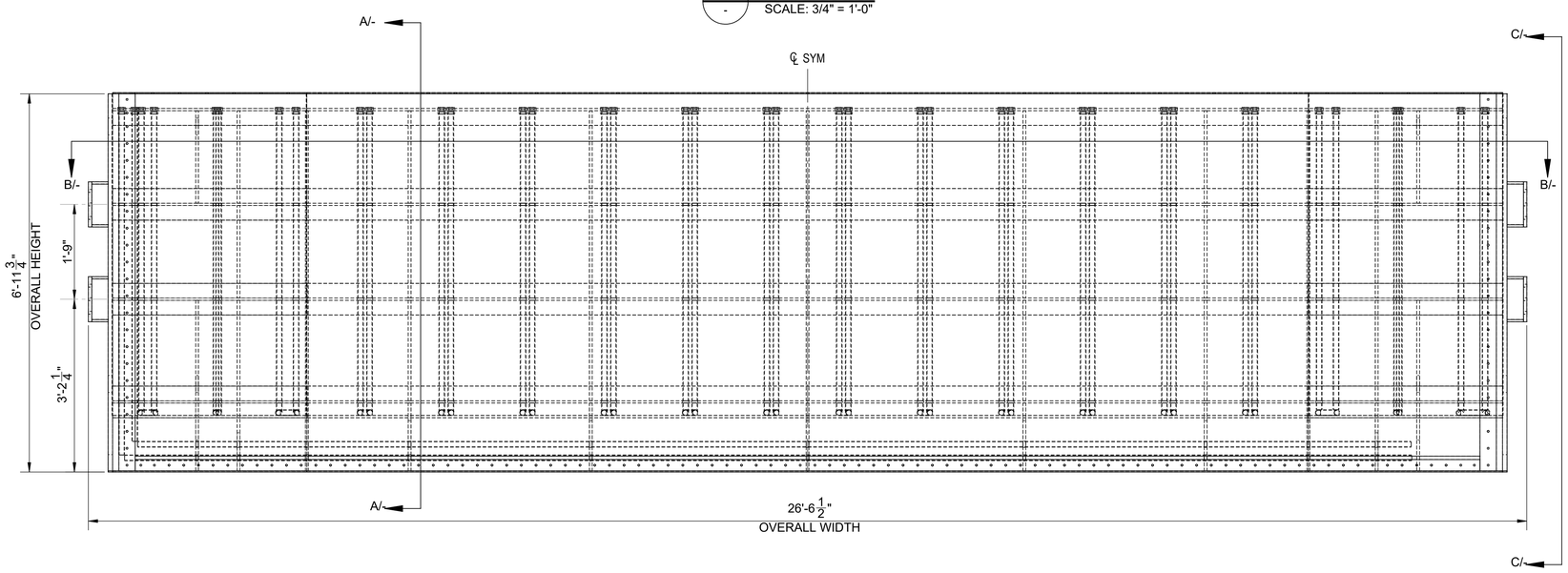

1 M2.00 **SPILLWAY GATE STRUCTURE**
SCALE: 3/4" = 1'-0"

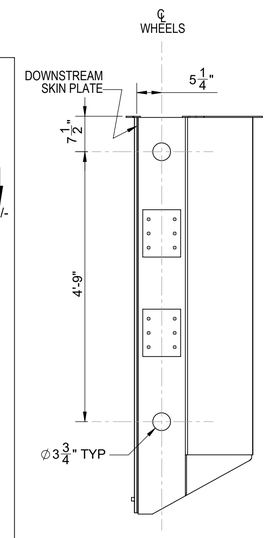

C - **VIEW**
SCALE: 3/4" = 1'-0"

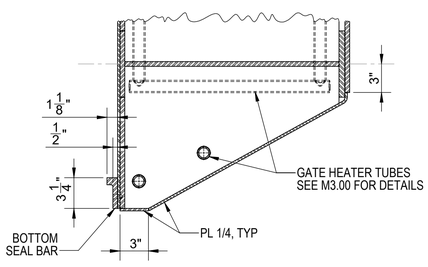

E - **DETAIL**
SCALE: 1 1/2" = 1'-0"

DESIGN DEVELOPMENT - NOT FOR CONSTRUCTION

2/23/2024 12:06:36 PM
X:\2023\1018\2300101 Zosel Dam\6.02 Solidworks\Current\01 DRAWINGS\M2.10 Gate Structure

kpff
1601 Fifth Avenue, Suite 1300
Seattle, WA 98101
206.382.0600
kpff.com

NO.	DATE	BY	ISSUANCE

DES Washington State DEPARTMENT OF ENTERPRISE SERVICES

DEPARTMENT OF ECOLOGY State of Washington

ZOSEL DAM
OROVILLE, WA

GATE STRUCTURE

DRAWN:	BBB	PROJECT NO.:	2300101
DESIGN:	HNS	SCALE:	
CHECKED:	DWH	DATE:	03/08/2024
DRAWING NO.	M2.10		
SHEET NO.	15	33	

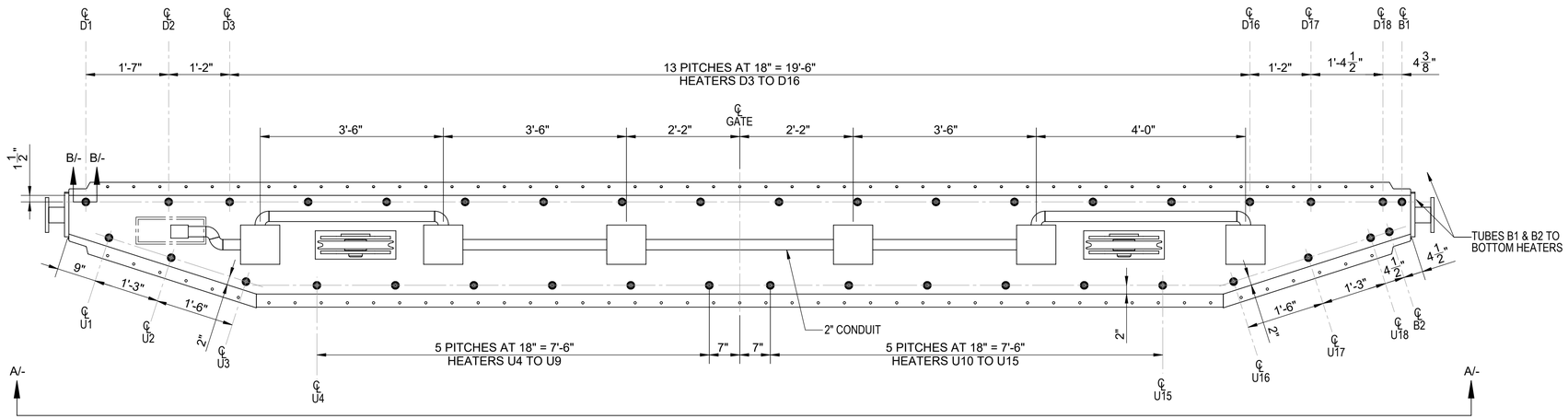

1 / M2.00 GATE HEATER

SCALE: 3/4" = 1'-0"
GATE #1 AND GATE #2 ONLY

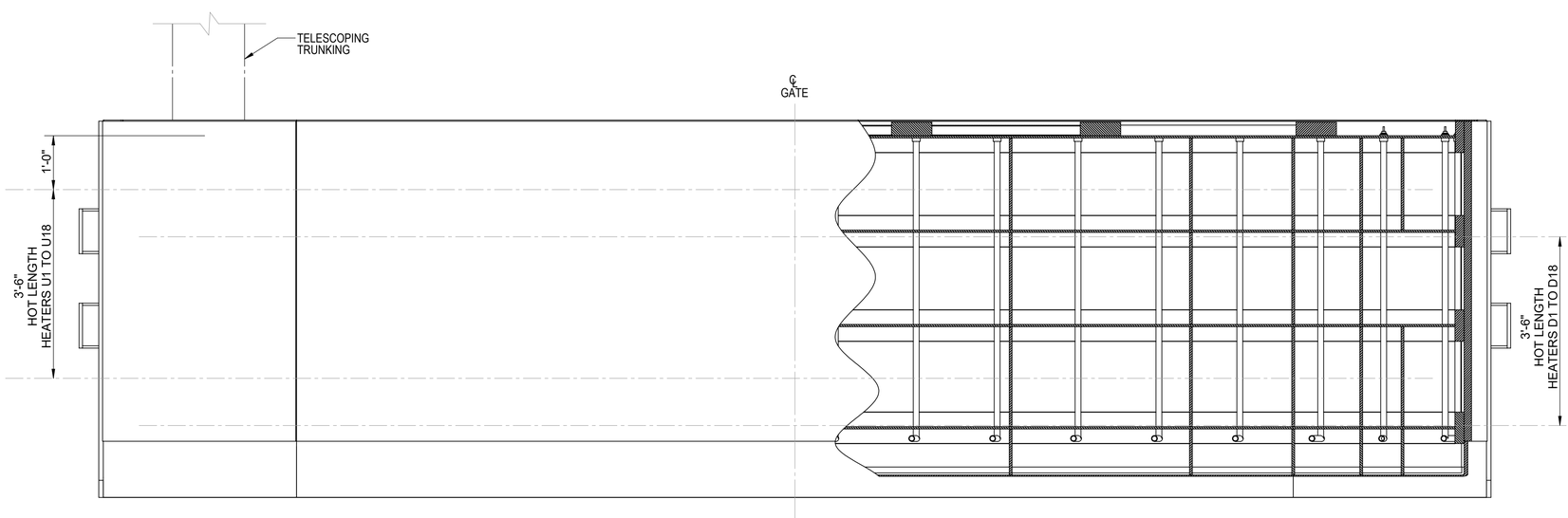

A / - VIEW

SCALE: 3/4" = 1'-0"

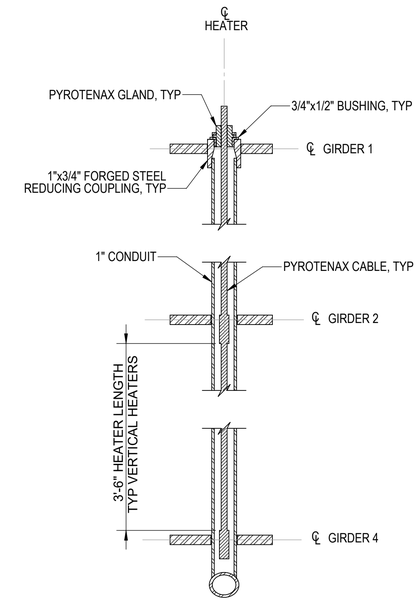

B / - SECTION

SCALE: 3" = 1'-0"

DESIGN DEVELOPMENT - NOT FOR CONSTRUCTION

3/8/2024 4:30:34 PM
X:\2023\1018\2300101 Zosel Dam\6.02 Solidworks\Current\01 DRAWINGS\M3.00 Gate Heater General Arrangement

kpff
1601 Fifth Avenue, Suite 1300
Seattle, WA 98101
206.382.0600
kpff.com

NO.	DATE	BY	ISSUANCE

Washington State DEPARTMENT OF ENTERPRISE SERVICES

DEPARTMENT OF ECOLOGY State of Washington

ZOSEL DAM
OROVILLE, WA

GATE HEATER GENERAL ARRANGEMENT

DRAWN:	KTF	PROJECT NO.:	2300101
DESIGN:	HNS	SCALE:	
CHECKED:	DWH	DATE:	03/08/2024
DRAWING NO.	M3.00		
SHEET NO.	16 OF 33		

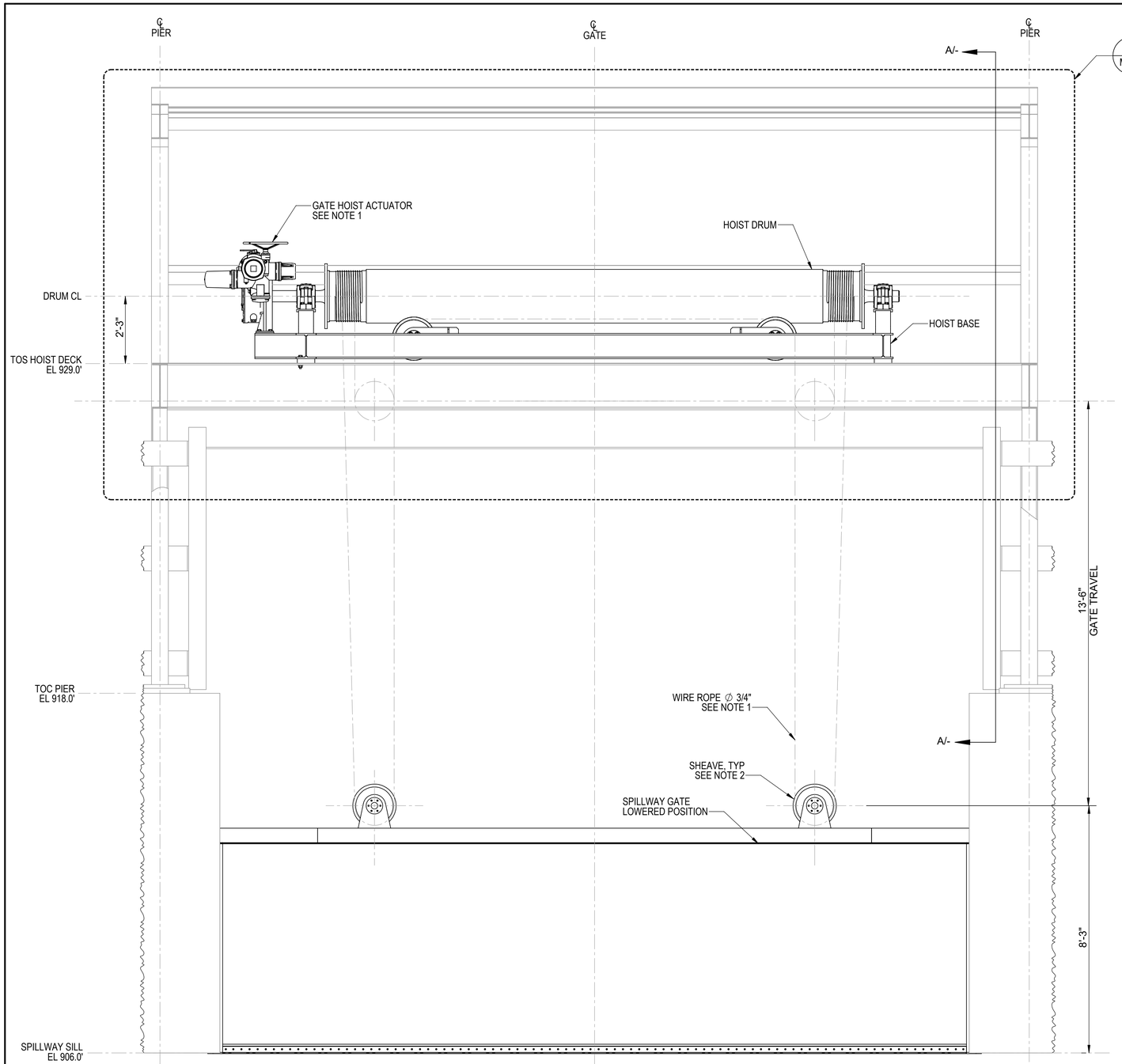

1 M1.00 **HOIST REEVING ARRANGEMENT**
SCALE: 1/2" = 1'-0"

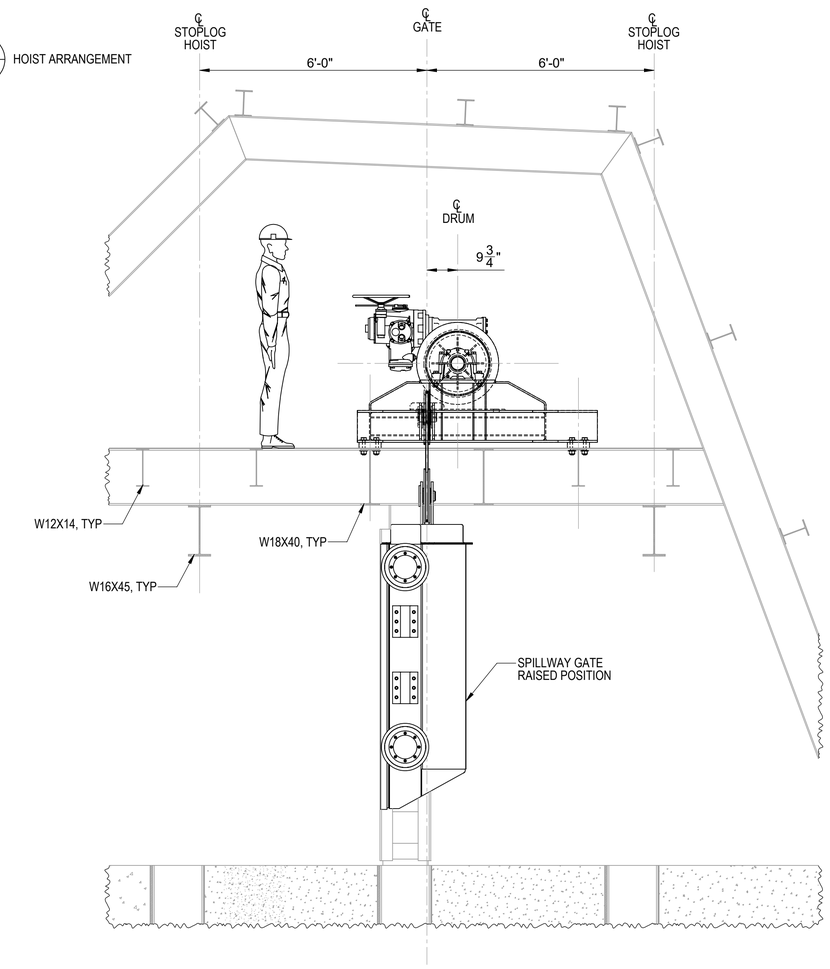

A - **SECTION**
SCALE: 1/2" = 1'-0"

GENERAL NOTES

1. WIRE ROPE, 3/4" DIAMETER. 6x36 CLASS IWRC, EIP/1960.
2. SHEAVE ∅ 15.75" PITCH DIAMETER, WITH CYLINDRICAL ROLLER BEARING.

DESIGN DEVELOPMENT - NOT FOR CONSTRUCTION

2/23/2024 12:29:15 PM
X:\2023\101823001 01 Zosel Dam\6.02 Solidworks\Current\01 DRAWINGS\M4.00 Hoist General Arrangement

kpff
1601 Fifth Avenue, Suite 1300
Seattle, WA 98101
206.382.0600
kpff.com

NO.	DATE	BY	ISSUANCE

DES Washington State DEPARTMENT OF ENTERPRISE SERVICES

DEPARTMENT OF ECOLOGY State of Washington

ZOSEL DAM
OROVILLE, WA

HOIST GENERAL ARRANGEMENT

DRAWN:	HNS	PROJECT NO.:	2300101
DESIGN:	HNS	SCALE:	
CHECKED:	DWH	DATE:	03/08/2024
DRAWING NO.	M4.00		
SHEET NO.	17 OF 33		

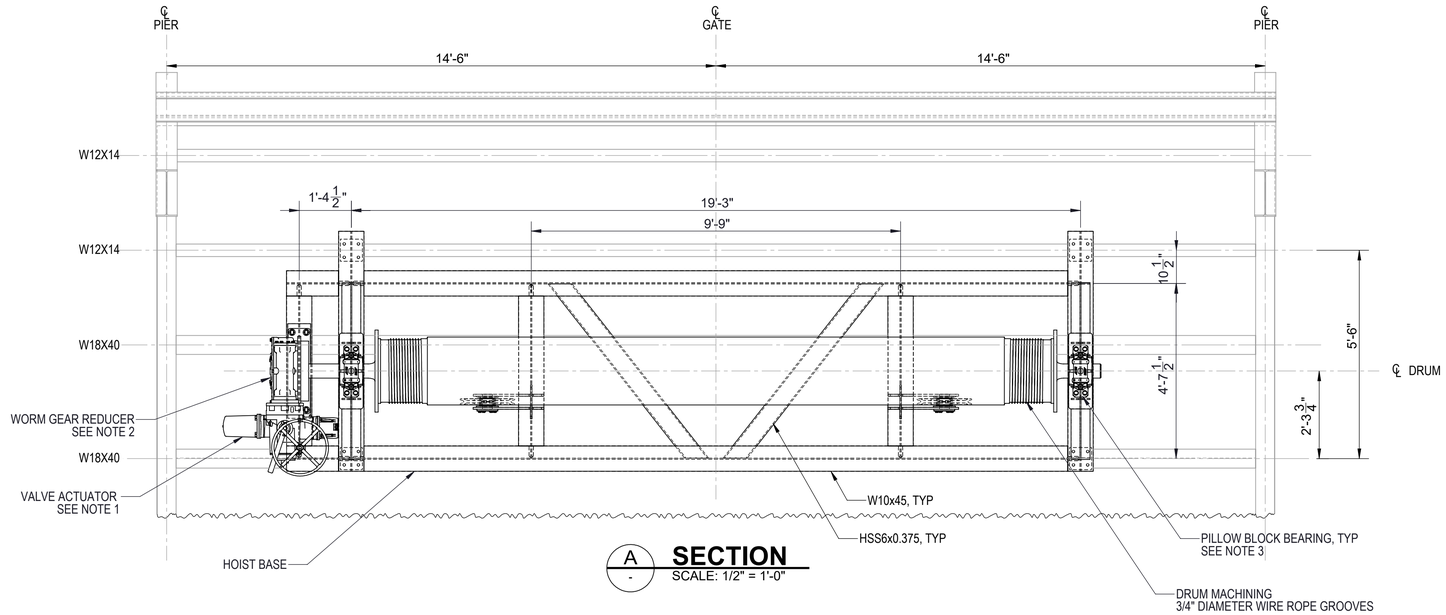

A / - **SECTION**
SCALE: 1/2" = 1'-0"

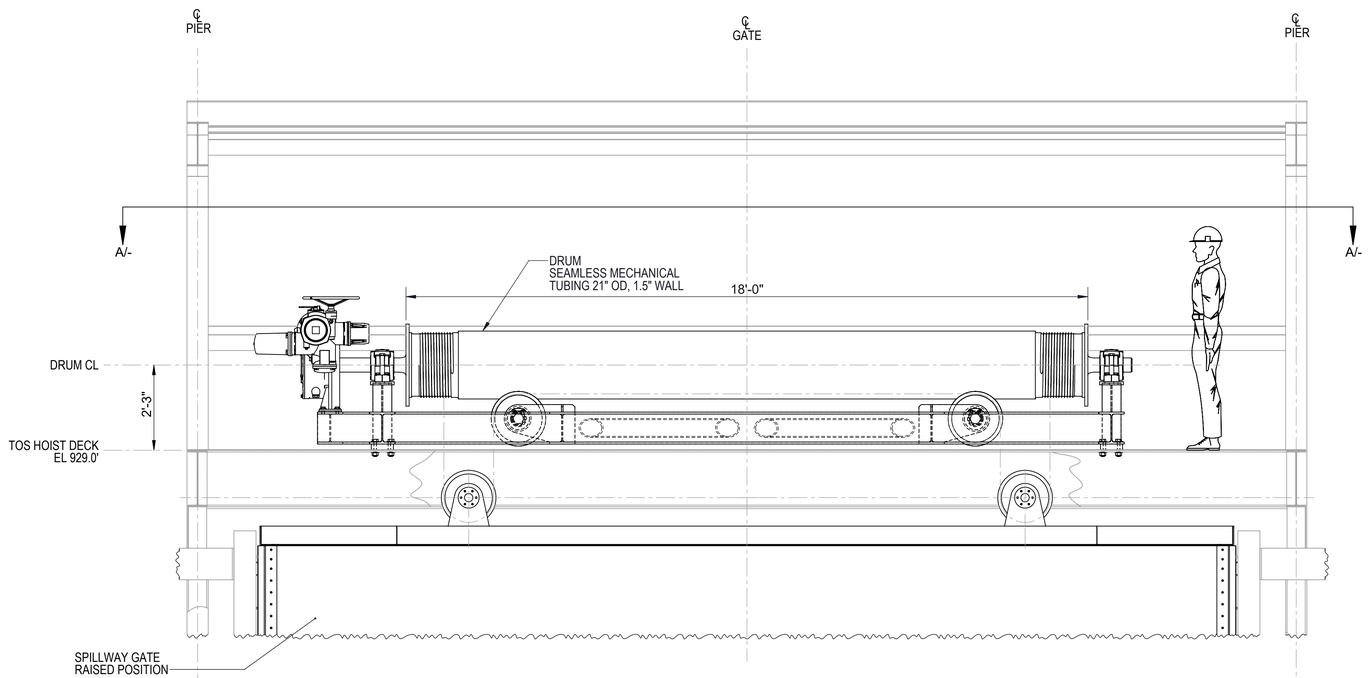

1 / M4.00 **HOIST ARRANGEMENT**
SCALE: 1/2" = 1'-0"

GENERAL NOTES

1. INTELLIGENT ELECTRIC MULTI-TURN VALVE ACTUATOR, MODULATING. FLOWSERVE PART NUMBER MX-85 OR EQUIVALENT.
2. MULTI-TURN WORMGEAR REDUCER, GEAR REDUCTION 68:1. FLOWSERVE PART NUMBER WG-07-68-360 OR EQUIVALENT.
3. PILLOW BLOCK BEARINGS, WITH SEALED SPHERICAL ROLLER BEARINGS, CYLINDRICAL BORE MOUNTED. SKF PART NUMBER SAF 22224 OR EQUIVALENT.

DESIGN DEVELOPMENT - NOT FOR CONSTRUCTION

2/23/2024 12:37:22 PM
X:\2023\1018230010 1 Zosel Dam\6.02 Solidworks\Current\01 DRAWINGS\M4.01 Hoist Arrangement

kpff
1601 Fifth Avenue, Suite 1300
Seattle, WA 98101
206.382.0600
kpff.com

NO.	DATE	BY	ISSUANCE

DES Washington State DEPARTMENT OF ENTERPRISE SERVICES

DEPARTMENT OF ECOLOGY State of Washington

ZOSEL DAM
OROVILLE, WA

HOIST ARRANGEMENT

DRAWN:	HNS	PROJECT NO.:	2300101
DESIGN:	HNS	SCALE:	
CHECKED:	DWH	DATE:	03/08/2024
DRAWING NO.	M4.01		
SHEET NO.	18 OF 33		

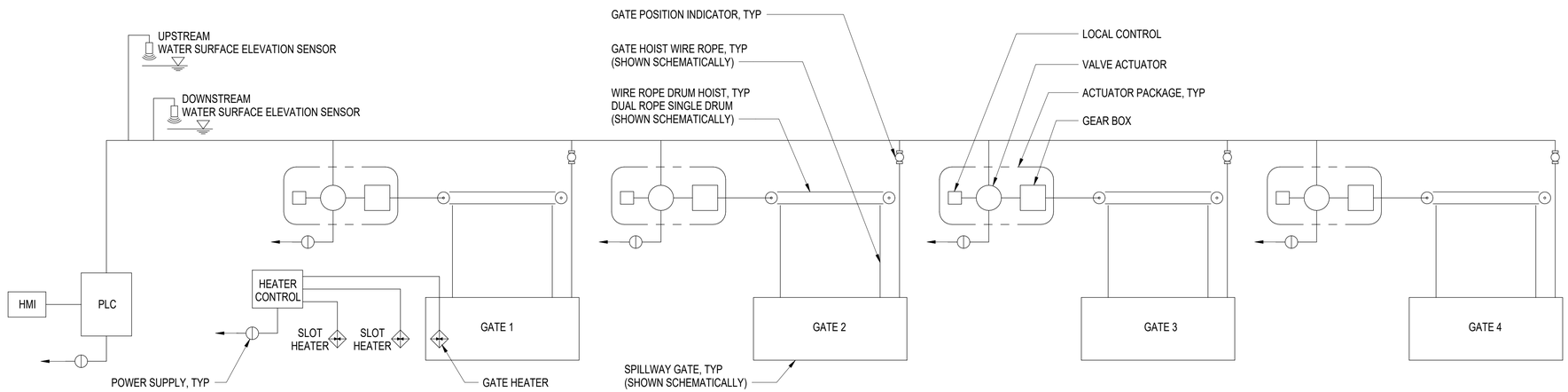

1 GATE HOIST SCHEMATIC
NTS

DESIGN DEVELOPMENT - NOT FOR CONSTRUCTION

3/8/2024 5:39:08 PM
C:\Users\tdavis\Documents\2300101 Zosel Dam R23_CENTRAL_tyler.davisSN5MB.rvt

kpff
1601 Fifth Avenue, Suite 1300
Seattle, WA 98101
206.382.0600
kpff.com

NO.	DATE	BY	ISSUANCE

Washington State DEPARTMENT OF ENTERPRISE SERVICES

DEPARTMENT OF ECOLOGY State of Washington

ZOSEL DAM
OROVILLE, WA

GATE HOIST SCHEMATIC

DRAWN:	TAD	PROJECT NO.:	2300101
DESIGN:	HNS	SCALE:	NTS
CHECKED:	DWH	DATE:	03/08/2024
DRAWING NO.	M4.02		
SHEET NO.	19 OF 33		

GENERAL

- EXISTING ELECTRICAL TO BE REMOVED
- EXISTING ELECTRICAL TO REMAIN
- NEW ELECTRICAL WORK
- MATCHLINE OR PROPERTY LINE
- ENLARGED PLAN BOUNDARY
- 1 / E1.01 — DETAIL/PLAN IDENTIFIER
- 1 / E1.01 — SECTION IDENTIFIER
- 1 / E1.01 — ELEVATION IDENTIFIER
- REVISION DEFINITION AREA, AREA ENCIRCLED CONTAINS CHANGES MADE SUBSEQUENT TO PREVIOUS ISSUE
- 1 — REVISION CALLOUT
- 1 — FLAG NOTE CALLOUT
- 1 — DEMOLITION NOTE TAG
- 1 — EQUIPMENT TAG
- AHU-01 — MECHANICAL EQUIPMENT TAG
- NORTH ARROW
- 1 — LOCATION WHERE PICTURE WAS TAKEN AND DIRECTION

LIGHTING

- LA1-12 — DEVICE SUBSCRIPTS (A: LIGHT FIXTURE TYPE; a: SWITCH LEG; 12: CIRCUIT NUMBER)
- LIGHTING FIXTURES (REFER TO LIGHTING FIXTURES SCHEDULE FOR ADDITIONAL INFORMATION)
- STRIP LIGHTING FIXTURE
- WALL-MOUNTED LIGHTING FIXTURE
- EMERGENCY LIGHTING FIXTURES (REFER TO LIGHTING FIXTURES SCHEDULE FOR ADDITIONAL INFORMATION)
- POLE-MOUNTED LIGHTING FIXTURE, QUANTITY OF HEADS AS INDICATED
- DOUBLE HEAD, POLE-MOUNTED, LIGHTING FIXTURE
- LIGHTING TRACK WITH FIXTURES
- SELF-CONTAINED BATTERY-POWERED EMERGENCY LIGHTING FIXTURE
- EXIT SIGN, UNIVERSAL MOUNTING (SHADED AREA INDICATES DIRECTION ARROWS)
- EXIT SIGN, WALL-MOUNTED (SHADED AREA INDICATES DIRECTION ARROWS)

LIGHTING CONTROL

- S — SWITCH, AS DEFINED BY SUBSCRIPT
  # = SWITCH LOCATED WITHIN THE SPACE IT IS CONTROLLING
  a = SWITCH LOCATED REMOTE FROM THE SPACE IT IS CONTROLLING
  MW = LINE VOLTAGE THREE-WAY OR FOUR-WAY
  SEE SWITCH SCHEDULE FOR ADDITIONAL INFORMATION.
- OS X — OCCUPANCY SENSOR, CEILING-MOUNTED WHERE INDICATED, SUBSCRIPT INDICATES TYPE
- OS — OCCUPANCY SENSOR, WALL-MOUNTED
- P — PHOTOSENSOR
- 1 / X-X — LIGHTING CONTROL TAG
- 10 FC — LIGHT LEVEL SET POINT TAG
- LCP — LIGHTING CONTROL PANEL
- RC — ROOM CONTROLLER

POWER

- SWITCHBOARD/SWITCHGEAR
- PANELBOARD, FLUSH-MOUNTED
- PANELBOARD, SURFACE-MOUNTED
- (FRONT) TRANSFORMER
- MOTOR CONNECTION
- DISCONNECT SWITCH, NON-FUSED
- DISCONNECT SWITCH, FUSED
- B — ENCLOSED CIRCUIT BREAKER
- VFD — VARIABLE FREQUENCY DRIVE
- SM — MANUAL MOTOR STARTER WITH THERMAL OVERLOADS
- COMBINATION STARTER/DISCONNECT
- MAGNETIC STARTER
- EQUIPMENT CONNECTION. CONFIRM CONNECTION WITH EQUIPMENT MANUFACTURER
- J F/S — FIRE/SMOKE DAMPER
- PUSHBUTTON CONTROLLER (SINGLE OR MULTIPLE BUTTONS)
- EMERGENCY POWER OFF PUSHBUTTON

RECEPTACLES

- P1A-22 — DEVICE SUBSCRIPTS (CIRCUIT NUMBER; CR,D,EM,GB,GF,IG,SB,TP,USB,WP OR OTHER SUBSCRIPT)
- +42" GF — (NON-STANDARD MOUNTING HEIGHT OR AC)
- SPECIAL RECEPTACLE
- DUPLEX RECEPTACLE
- FOURPLEX RECEPTACLE
- SPLIT WIRE RECEPTACLE
- SIMPLEX RECEPTACLE
- CORD DROP RECEPTACLE
- RETRACTABLE CORD REEL RECEPTACLE

RACEWAY AND BOXES

- J — JUNCTION BOX
- J F — FURNITURE WALL FEED OUTLET BOX
- PB XX — PULL BOX (WHERE INDICATED, SUBSCRIPT INDICATES PULL BOX NUMBER)
- HH — HANDHOLE (WHERE INDICATED, SUBSCRIPT INDICATES HANDHOLE NUMBER)
- XX — VAULT (WHERE INDICATED, SUBSCRIPT INDICATES VAULT TYPE)
- A — FLOORBOX (WHERE INDICATED, SUBSCRIPT INDICATES FLOOR BOX TYPE)
- A — POKE-THRU (WHERE INDICATED, SUBSCRIPT INDICATES FLOOR POKE-THRU TYPE)
- POWER POLE, FLOOR TO CEILING
- SURFACE METAL RACEWAY
- RACEWAY CONCEALED IN-WALL OR IN-CEILING (EXPOSED IN UNFINISHED AREAS)
- RACEWAY RUN BELOW FLOOR OR BELOW GRADE
- FLEXIBLE RACEWAY
- RACEWAY (CIRCLE DENOTES VERTICAL TRANSITION)
- RACEWAY CONTINUATION
- RACEWAY STUB WITH BUSHINGS
- RACEWAY SLEEVE WITH BUSHINGS
- FIRE STOPPING SLEEVE
- CABLE TRAY, 12"W x 4"H OVERHEAD, UNLESS OTHERWISE NOTED
- CABLE TRAY, OVERHEAD LADDER TYPE
- HA- — HOMERUN TO PANEL (INDICATES PANEL DESIGNATION AND CIRCUIT NUMBER)
- # — (GAUGE OF WIRE OTHER THAN AWG#12); NUMBER OF CONDUCTORS; (GROUND CONDUCTOR); (PHASE CONDUCTORS); (NEUTRAL CONDUCTOR)

GROUNDING

- G — GROUNDING CONDUCTOR
- GROUNDING ROD
- GROUNDING BUSBAR
- EQUIPMENT GROUNDING CONNECTION
- GROUNDING STRAP

ONE-LINE DIAGRAM

- EQUIPMENT ENCLOSURE
- BUS
- WIRE
- TERMINAL / LUG
- CONNECTION
- DELTA
- WYE
- POWER TRANSFORMER
- CURRENT TRANSFORMER
- TRANSFER SWITCH
- CIRCUIT BREAKER, FIXED
- CIRCUIT BREAKER, DRAWOUT
- DISCONNECT SWITCH
- FUSED SWITCH
- FUSE
- FUSED CUTOUTS
- GF — CIRCUIT BREAKER WITH GROUND FAULT PROTECTION
- ST — CIRCUIT BREAKER WITH SHUNT TRIP OPERATOR
- K — CIRCUIT BREAKER WITH KIRK KEY
- GF — FUSED SWITCH WITH GROUND FAULT PROTECTION
- MOTOR CONNECTION
- G — GENERATOR
- M — METERING DEVICE (M = METER; WH = WATT HOUR METER; A = AMMETER; V = VOLTMETER)
- ST — SHUNT TRIP
- GF — GROUND FAULT PROTECTION
- EPM — ELECTRONIC POWER METER
- SPD — SURGE PROTECTIVE DEVICE
- GROUND
- 12,241 — AVAILABLE FAULT CURRENT (SYMMETRICAL) TAG
- 225 — FEEDER TAG
- PAD-MOUNTED TRANSFORMER
- 480V / 208Y 120V — TRANSFORMER
- PANELBOARD - MAIN LUGS ONLY
- PANELBOARD - MAIN CIRCUIT BREAKER

NOT ALL SYMBOLS MAY APPEAR ON THE DRAWINGS

DRAWING INDEX

E0.01	ELECTRICAL LEGEND AND DRAWING INDEX
E0.02	ELECTRICAL ABBREVIATIONS AND GENERAL NOTES
E0.03	ELECTRICAL SCHEDULES
ED2.01	ELECTRICAL LIGHTING PLAN LEVEL 1 - DEMOLITION
ED2.02	ELECTRICAL LIGHTING PLAN LEVEL 2 - DEMOLITION
ED2.03	ELECTRICAL LIGHTING PLAN ROOF - DEMOLITION
ED3.02	ELECTRICAL POWER PLAN LEVEL 2 - DEMOLITION
ED9.01	ELECTRICAL ONE-LINE DIAGRAM - DEMOLITION
E2.01	ELECTRICAL LIGHTING PLAN LEVEL 1
E2.02	ELECTRICAL LIGHTING PLAN LEVEL 2
E2.03	ELECTRICAL LIGHTING PLAN ROOF
E3.01	ELECTRICAL POWER PLAN LEVEL 1
E3.02	ELECTRICAL POWER PLAN LEVEL 2
E9.01	ELECTRICAL ONE-LINE DIAGRAM

NOT FOR CONSTRUCTION - NOT FOR CONSTRUCTION

HARGIS

Hargis Engineers, Inc.
1201 Third Ave, Suite 600
Seattle, WA 98101

t | 206.448.3376
f | 206.448.4450
w | hargis.biz

PRELIMINARY

NO.	DATE	BY	ISSUANCE
	12/20/2023		SD SET
	02/23/2024		DD SET

DES — Washington State DEPARTMENT OF ENTERPRISE SERVICES

DEPARTMENT OF ECOLOGY State of Washington

ZOSEL DAM
OROVILLE, WA

ELECTRICAL LEGEND AND DRAWING INDEX

DRAWN:	SWS	PROJECT NO.:	23091.06
DESIGN:	MM	SCALE:	12" = 1'-0"
CHECKED:	ES	DATE:	03/08/2024
DRAWING NO.	E0.01		
SHEET NO.	20 OF 33		

3/6/2024 3:50:42 PM
C:\Revit Local\Revit Local R23\Zosel Dam_seth.stoothoff.rvt

GENERAL NOTES

1. PERFORM WORK IN ACCORDANCE WITH APPLICABLE NATIONAL AND STATE CODES AS AMENDED LOCALLY AND ENFORCED BY THE AHJ.
2. OBTAIN AND PAY FOR PERMITS REQUIRED FOR INSTALLATION OF WORK. ARRANGE AND SCHEDULE REQUIRED INSPECTIONS.
3. COORDINATE WITH UTILITY COMPANIES FURNISHING SERVICES TO PROJECT. INSTALLATION OF UTILITY SERVICES SHALL BE IN ACCORDANCE WITH UTILITY REQUIREMENTS. VERIFY APPLICABLE INSTALLATION STANDARDS AND REQUIREMENTS. PROVIDE AND SUBMIT ELECTRICAL DRAWINGS TO UTILITY FOR APPROVAL PRIOR TO ROUGH-IN AND PRIOR TO ORDERING EQUIPMENT.
4. DEVICE LOCATIONS ARE APPROXIMATE. COORDINATE DEVICE LOCATIONS AND ELEVATIONS WITH APPROPRIATE DOCUMENTS INCLUDING CASEWORK SHOP DRAWINGS AND ARCHITECT'S INTERIOR ELEVATIONS PRIOR TO ROUGH-IN.
5. COORDINATE ELECTRICAL WORK WITH THAT OF OTHER TRADES. REFER TO MECHANICAL, ARCHITECTURAL, STRUCTURAL, CIVIL, AND LANDSCAPE DRAWINGS AND SPECIFICATIONS. COORDINATION SHALL OCCUR PRIOR TO FABRICATION, PURCHASE, AND INSTALLATION OF WORK.
6. COORDINATE LOCATION OF LIGHT FIXTURES AND CEILING-MOUNTED DEVICES WITH ARCHITECTURAL REFLECTED CEILING PLANS AND ELEVATIONS.
7. PROVIDE RATED ENCLOSURES AROUND ALL LIGHT FIXTURES PENETRATING RATED CEILINGS. COORDINATE WITH ARCHITECTURAL.
8. REFER TO ARCHITECTURAL AND STRUCTURAL DRAWINGS FOR LOCATIONS OF EXPANSION/SEISMIC JOINTS. PROVIDE RACEWAY EXPANSION/SEISMIC JOINTS FOR RACEWAYS CROSSING BUILDING EXPANSION/SEISMIC JOINTS.
9. DEMOLISH EXISTING SYSTEMS AS INDICATED ON PLANS OR AS REQUIRED FOR INSTALLATION OF NEW WORK. MATERIAL SHALL BE REMOVED FROM SITE AND LEGALLY DISPOSED OF OFF SITE UNLESS OTHERWISE DIRECTED. RETURN ITEMS TO OWNER IN EXISTING CONDITION WHEN DIRECTED BY OWNER.
10. COMPLETION OF WORK SHALL BE EXECUTED IN ACCORDANCE WITH THE PROJECT SCHEDULE. SCHEDULE INSTALLATION WITH OTHER TRADES TO ENSURE PROJECT MILESTONES ARE MET.
11. DRAWINGS ARE DIAGRAMMATIC AND DO NOT SHOW ALL COMPONENTS REQUIRED FOR A COMPLETE INSTALLATION. PROVIDE COMPONENTS REQUIRED FOR COMPLETE AND OPERATIONAL SYSTEMS INCLUDING RACEWAYS, CONDUCTORS, BOXES, SUPPORTS AND SIMILAR ITEMS.
12. BRANCH CIRCUIT HOMERUNS ARE SHOWN TO INDICATE CIRCUIT PROPERTIES AND CONFIGURATION. SINGLE-CIRCUIT HOMERUNS SERVED FROM THE SAME PANELBOARD MAY BE COMBINED IN ACCORDANCE WITH THE DIVISION 26 SPECIFICATIONS, UNLESS INDICATED OTHERWISE. EXTEND AND CONNECT BRANCH CIRCUIT RACEWAY AND WIRING FROM HOMERUN TO DEVICES AND EQUIPMENT WITH CIRCUIT NUMBERS INDICATED. CONDUCTOR QUANTITIES AND SIZES ARE INDICATED AT HOMERUNS ONLY. SHOW ACTUAL RACEWAY ROUTING AND CIRCUITING ON RECORD DRAWINGS. MINIMUM CONDUCTOR SIZE #12 AWG.
13. LIGHT FIXTURES MOUNTED IN CONTINUOUS ROWS SHALL BE THROUGH-WIRED VIA FIXTURE INTERNAL WIREWAYS. CIRCUITS AS INDICATED ON DRAWINGS. FIXTURES NOT LISTED FOR THROUGH WIRING SHALL BE WIRED VIA SEPARATE RACEWAY AND WIRING SYSTEM EXTERNAL TO THE FIXTURES. PROVIDE RACEWAYS, WIRING AND CONNECTIONS FOR A COMPLETE AND OPERATIONAL SYSTEM.

ABBREVIATIONS

A	AMPERE
AC	AIR CONDITIONING; ALTERNATING CURRENT, ABOVE COUNTER
AF	AMP FUSE; AMP FRAME
AFC	AVAILABLE FAULT CURRENT
AFF	ABOVE FINISHED FLOOR
AG	ABOVE GRADE
AHJ	AUTHORITIES HAVING JURISDICTION
AHU	AIR HANDLING UNIT
AIC	AMPERE INTERRUPTING CAPACITY
AL	ALUMINUM
ANSI	AMERICAN NATIONAL STANDARDS INSTITUTE
AS	AMP SWITCH
AT	AMP TRIP
ATM	ASYNCHRONOUS TRANSFER MODE
ATS	AUTOMATIC TRANSFER SWITCH
AV	AUDIO VISUAL
AWG	AMERICAN WIRE GAUGE
BAS	BUILDING AUTOMATION SYSTEM
BATT	BATTERIES
BIL	BASIC IMPULSE INSULATION LEVEL
BKBD	BACKBOARD
BKR	BREAKER
BLDG	BUILDING
C	CONDUIT; DEGREES CELCIUS
CAB	CABINET
CAT	CATEGORY
CATV	COMMUNITY ANTENNA TELEVISION
CB	CIRCUIT BREAKER
CCTV	CLOSED CIRCUIT TELEVISION
CLG	CEILING
CM	CEILING-MOUNTED
CO	CONDUIT ONLY
COW	COMPUTER ON WHEELS
CR	CONTROLLED RECEPTACLE
CT	CURRENT TRANSFORMER
CU	COPPER
D	DEDICATED
DDC	DIRECT DIGITAL CONTROL
DEMARC	DEMARCATION POINT
DISC	DISCONNECT
DIST	DISTRIBUTION
DSL	DIGITAL SUBSCRIBER LINE
DWG	DRAWING
(E)	EXISTING
EA	EACH
EF	EXHAUST FAN
EIA	ELECTRONIC INDUSTRIES ASSOCIATION
ELEV	ELEVATION
EM	EMERGENCY
EMT	ELECTRICAL METALLIC TUBING
ENCL	ENCLOSURE
EPM	ELECTRONIC POWER METER
EPO	EMERGENCY POWER OFF
EQUIP	EQUIPMENT
ETR	EXISTING TO REMAIN
EVCS	ELECTRIC VEHICLE CHARGING STATION
EWC	ELECTRIC WATER COOLER
F	FUSES; DEGREES FAHRENHEIT
FA	FIRE ALARM
FAAP	FIRE ALARM ANNUNCIATOR PANEL
FACP	FIRE ALARM CONTROL PANEL
FBO	FURNISHED BY OWNER
FOIC	FURNISHED BY OWNER INSTALLED BY CONTRACTOR
FOIO	FURNISHED BY OWNER INSTALLED BY OWNER
FSD	FIRE SMOKE DAMPER
G	GROUND
GB	GROUND FAULT CIRCUIT INTERRUPTER BREAKER
GF	GROUND FAULT CIRCUIT INTERRUPTER
GFP	GROUND FAULT PROTECTION
GND	GROUND
GRS	GALVANIZED RIGID STEEL
HC	HORIZONTAL CROSS CONNECT
HID	HIGH INTENSITY DISCHARGE
HP	HORSEPOWER
HTR	HEATER
Hz	HERTZ
IBC	INTERNATIONAL BUILDING CODE
IC	INTERMEDIATE CROSS CONNECT
IDF	INTERMEDIATE DISTRIBUTION FRAME
IEEE	INSTITUTE OF ELECTRICAL AND ELECTRONIC ENGINEERS
IG	ISOLATED GROUND
IMC	INTERMEDIATE METALLIC CONDUIT
ISDN	INTEGRATED SERVICES DIGITAL NETWORK
J	JUNCTION
K	KIRK KEY
KCMIL	THOUSAND CIRCULAR MILS
kVA	KILOVOLT AMPERE
KVAR	KILOVOLT AMPERE REACTIVE
kW	KILOWATT
LAN	LOCAL AREA NETWORK
LCP	LIGHTING CONTROL PANEL
LEC	LOCAL EXCHANGE CARRIER
LT	LIGHT
LTG	LIGHTING
M	METER
MAN	METROPOLITAN AREA NETWORK
MAX	MAXIMUM
MC	MAIN CROSS CONNECT; METAL CLAD (CABLE)
MCB	MAIN CIRCUIT BREAKER
MCC	MOTOR CONTROL CENTER
MDF	MAIN DISTRIBUTION FRAME
MDP	MAIN DISTRIBUTION PANEL
MFR	MANUFACTURER
MH	MANHOLE
MIN	MINIMUM
MLO	MAIN LUGS ONLY
MM	MULTIMODE
MPOE	MAIN POINT OF ENTRY
MPOP	MAIN POINT OF PRESENCE
MTD	MOUNTED
MTS	MANUAL TRANSFER SWITCH
MV	MEDIUM VOLTAGE
(N)	NEW
N	NEUTRAL
NAC	NOTIFICATION APPLIANCE CIRCUIT
NEC	NATIONAL ELECTRICAL CODE
NEMA	NATIONAL ELECTRICAL MANUFACTURERS ASSOCIATION
NF	NON-FUSED
NIC	NOT IN CONTRACT
NL	NIGHT LIGHT
OFC	OPTICAL FIBER CABLE
OHL	OVERHEAD LINE
OL	OVERLOAD
OS	OCCUPANCY SENSOR
OSP	OUTSIDE PLANT
P	POLE
PBX	PRIVATE BRANCH EXCHANGE
PF	POWER FACTOR
PH	PHASE
PIR	PASSIVE INFRARED
PIV	POST INDICATING VALVE
PNL	PANEL
PP	PATCH
PT	POTENTIAL TRANSFORMER
PVC	POLYVINYL CHLORIDE
RCP	REFLECTED CEILING PLAN
REC	RECEPTACLE
REF	REFER TO
REV	REVISION
RM	ROOM
RTRC	REINFORCED THERMOSETTING RESIN CONDUIT
RU	RACK UNIT
SHT	SHEET
SLC	SIGNALING LINE CIRCUIT
SM	SINGLEMODE
SMFC	SURFACE-MOUNTED OPTICAL FIBER CABINET
SMR	SURFACE METAL RACEWAY
SONET	SYNCHRONOUS OPTICAL NETWORK
SP	SERVICE PROVIDER
SPD	SURGE PROTECTIVE DEVICE
SPEC	SPECIFICATIONS
SPST	SINGLE POLE SINGLE THROW
ST	SHUNT TRIP
STP	SHIELDED TWISTED PAIR
SVGA	SUPER VIDEO GRAPHICS ARRAY
SW	SWITCH
SWBD	SWITCHBOARD
TBB	TELECOMMUNICATIONS BONDING BACKBONE
TEL	TELEPHONE
TELCO	TELEPHONE COMPANY
TGB	TELECOMMUNICATIONS GROUNDING BUSBAR
TIA	TELECOMMUNICATIONS INDUSTRY ASSOCIATION
TMGB	TELECOMMUNICATIONS MAIN GROUNDING BUSBAR
TP	TAMPERPROOF
TR	TELECOMMUNICATIONS ROOM
TTB	TELEPHONE TERMINAL BOARD
TV	TELEVISION
TVSS	TRANSIENT VOLTAGE SURGE SUPPRESSION
TYP	TYPICAL
UG	UNDERGROUND
UL	UNDERWRITERS LABORATORIES
UON	UNLESS OTHERWISE NOTED
UPS	UNINTERRUPTIBLE POWER SUPPLY
USB	UNIVERSAL SERIAL BUS
UTP	UNSHIELDED TWISTED PAIR
UV	UNIT VENTILATOR
V	VOLTS
VA	VOLT AMPERES
VFD	VARIABLE FREQUENCY DRIVE
W	WASTE, WATT, WIDE, WATER
W/	WITH
W/O	WITHOUT
WA	WORKSTATION AREA
WAN	WIDE AREA NETWORK
WG	WIRE GUARD
WH	WATT HOUR METER
WP	WEATHERPROOF
XFMR	TRANSFORMER
Y	WYE
Z	IMPEDANCE

NON-STRUCTURAL ELECTRICAL COMPONENT NOTES

1. THE FOLLOWING ITEMS ARE TAKEN DIRECTLY FROM THE 2018 INTERNATIONAL BUILDING CODE AND FROM THE AMERICAN SOCIETY OF CIVIL ENGINEERS (ASCE) STANDARD 7. THE CONTRACTOR SHALL REFER TO THE ABOVE FOR ADDITIONAL INFORMATION, EXCEPTIONS, AND FURTHER DESCRIPTIONS. THE CONTRACTOR SHALL ADHERE TO REQUIREMENTS AND AS SUCH, SHALL BE INCLUDED WITHIN BID. ALSO REFER TO SPECIFICATIONS.
2. 2018 IBC, 1613.1, SCOPE: ARCHITECTURAL, MECHANICAL, ELECTRICAL, AND NON-STRUCTURAL COMPONENTS THAT ARE PERMANENTLY ATTACHED TO STRUCTURES AND THEIR SUPPORTS AND ATTACHMENTS SHALL BE DESIGNED AND CONSTRUCTED TO RESIST THE EFFECTS OF EARTHQUAKE MOTIONS IN ACCORDANCE WITH ASCE 7, EXCLUDING CHAPTER 14 AND APPENDIX 11A.
3. ASCE 7 CONTRACTOR RESPONSIBILITY:
   THE CONTRACTOR SHALL BE RESPONSIBLE FOR THE CONSTRUCTION OF A SEISMIC-FORCE-RESISTING SYSTEM, DESIGNATED SEISMIC SYSTEM, OR COMPONENT LISTED IN THE QUALITY ASSURANCE PLAN AND SHALL SUBMIT A WRITTEN CONTRACTOR'S STATEMENT OF RESPONSIBILITY TO THE AUTHORITY HAVING JURISDICTION AND TO THE OWNER PRIOR TO THE COMMENCEMENT OF WORK ON THE SYSTEM OR COMPONENT. THE CONTRACTOR'S STATEMENT OF RESPONSIBILITY SHALL INCLUDE THE FOLLOWING:
   - A. ACKNOWLEDGMENT OF AWARENESS OF THE SPECIAL REQUIREMENTS CONTAINED IN THE QUALITY ASSURANCE PLAN;
   - B. ACKNOWLEDGMENT THAT CONTROL WILL BE EXERCISED TO OBTAIN CONFORMANCE WITH THE CONSTRUCTION DOCUMENTS APPROVED BY THE AUTHORITY HAVING JURISDICTION;
   - C. PROCEDURES FOR EXERCISING CONTROL WITHIN THE CONTRACTOR'S ORGANIZATION, THE METHOD AND FREQUENCY OF REPORTING AND THE DISTRIBUTION OF THE REPORTS; AND
   - D. IDENTIFICATION AND QUALIFICATIONS OF THE PERSON(S) EXERCISING SUCH CONTROL AND THEIR POSITION(S) IN THE ORGANIZATION.
4. DIVISION 26 RESPONSIBILITIES:
   - A. HANGERS AND SEISMIC BRACING FOR ELECTRICAL SYSTEMS SHALL BE DESIGNED AND SPECIFIED BY DIVISION 26. DIVISION 26 SHALL REFER TO THE ELECTRICAL DRAWINGS FOR LOCATIONS OF EQUIPMENT AND ELECTRICAL SYSTEMS AS STRUCTURAL DRAWINGS DO NOT SHOW THE LOCATIONS OF ELECTRICAL EQUIPMENT, RACEWAYS, AND OTHER COMPONENTS.
   - B. DIVISION 26 SHALL COORDINATE THE SUPPORT SYSTEMS AND DESIGN LOADS FOR HUNG RACEWAYS AND OTHER ELECTRICAL SYSTEMS (INCLUDING COMBINED MULTIPLE RACEWAY RUNS) WITH THE GENERAL CONTRACTOR AND THE STEEL AND WOOD JOIST MANUFACTURERS IN ADDITION TO OTHER TRADES THAT MAY BE IMPACTED.

ENERGY CODE NOTES

1. RECORD DRAWINGS: SUBMIT TO THE BUILDING OWNER PER ENERGY CODE ENFORCED BY THE LOCAL AHJ.
2. OPERATION AND MAINTENANCE MANUALS: SUBMIT TO THE BUILDING OWNER PER ENERGY CODE ENFORCED BY THE LOCAL AHJ.
3. THIS BUILDING AND ITS ENERGY SYSTEMS HAVE BEEN DESIGNED TO COMPLY WITH ENERGY CODE ENFORCED BY THE LOCAL AHJ. CONTRACTOR IS RESPONSIBLE FOR CORRECT INSTALLATION OF ENERGY CONSERVATION MEASURES.
4. LIGHTING CONTROL SYSTEMS COMMISSIONING AND COMPLETION REQUIREMENTS: TEST SYSTEMS TO ENSURE THAT BUILDING SYSTEMS HAVE BEEN INSTALLED AND FUNCTION PROPERLY AND EFFICIENTLY, AND CAN BE MAINTAINED IN ACCORDANCE WITH THE CONTRACT DOCUMENTS AND OPERATIONAL REQUIREMENTS PER ENERGY CODE ENFORCED BY THE AHJ. REFER TO SPECIFICATIONS FOR ADDITIONAL COMMISSIONING REQUIREMENTS.

HARGIS

Hargis Engineers, Inc.
1201 Third Ave, Suite 600
Seattle, WA 98101

t | 206.448.3376
f | 206.448.4450
w | hargis.biz

PRELIMINARY

NO.	DATE	BY	ISSUANCE
	12/20/2023		SD SET
	02/23/2024		DD SET

Washington State DEPARTMENT OF ENTERPRISE SERVICES

DEPARTMENT OF ECOLOGY State of Washington

ZOSEL DAM
OROVILLE, WA

ELECTRICAL ABBREVIATIONS AND GENERAL NOTES

DRAWN:	SWS	PROJECT NO.:	23091.06
DESIGN:	MM	SCALE:	12" = 1'-0"
CHECKED:	ES	DATE:	03/08/2024
DRAWING NO.	E0.02		
SHEET NO.	21 OF 33		

NOT FOR CONSTRUCTION - NOT FOR CONSTRUCTION

3/6/2024 3:50:46 PM
C:\Revit Local\Revit Local R23\Zosel Dam_seth.stoothoff.rvt

LIGHT FIXTURE SCHEDULE

TYPE	DESCRIPTION	MANUFACTURER	MODEL SERIES	LIGHT SOURCE	COLOR TEMP	DELIVERED LUMENS	INPUT WATTS	FINISH	NOTES
D1	CEILING-MOUNTED DOWNLIGHT, WET LOCATION LISTED.	STONCO	GC60	LED		4250	28		
S1	LINEAR 4' STRIP, VAPOR TIGHT, WET LOCATION LISTED.	SOLAS	SV248	LED		4000	80		
W1	WALL-MOUNTED WITH GUARD, WET LOCATION LISTED.	COOPER	TRR11 LD4	LED		2333	25		
X1	EXIT LIGHT FIXTURE. GREEN LETTERING WITH WHITE FACE PLATE. WET LOCATION LISTED.	COOPER	LPXW	LED		-	2.7		
WX2	EMERGENCY LIGHT WITH BATTERY BACK-UP. WET LOCATION LISTED.	COOPER	SELHP100R3	LED		580	4.3		
P1	POLE MOUNTED FLOOD LIGHT. WET LOCATION LISTED.	LITHONIA	ESXF5	LED	3000K	30000	184		

NOTES:

1.
2.

NOT FOR CONSTRUCTION - NOT FOR CONSTRUCTION

HARGIS

Hargis Engineers, Inc.
1201 Third Ave, Suite 600
Seattle, WA 98101

t | 206.448.3376
f | 206.448.4450
w | hargis.biz

PRELIMINARY

NO.	DATE	BY	ISSUANCE
	12/20/2023		SD SET
	02/23/2024		DD SET

DES Washington State DEPARTMENT OF ENTERPRISE SERVICES

DEPARTMENT OF ECOLOGY State of Washington

ZOSEL DAM
OROVILLE, WA

ELECTRICAL SCHEDULES

DRAWN:	Author	PROJECT NO.:	23091.06
DESIGN:	Designer	SCALE:	1/8" = 1'-0"
CHECKED:	Checker	DATE:	03/08/2024

DRAWING NO. **E0.03**

SHEET NO. 22 OF 33

3/6/2024 3:50:50 PM
C:\Revit Local\Revit Local R23\Zosel Dam_seth.stoothoff.rvt

SHEET NOTES

1. ELECTRICAL ITEMS SHOWN ARE DIAGRAMMATIC BASED ON AVAILABLE RECORD DRAWINGS AND SITE WALKS DURING THE DESIGN PERIOD. NOT ALL SYSTEM COMPONENTS ARE SHOWN. FIELD VERIFY DEVICE LOCATIONS AND QUANTITIES PRIOR TO COMMENCING WORK. REROUTE EXISTING-TO-REMAIN DEVICE CONDUIT AND WIRING AS REQUIRED.

2. REMOVE UNUSED SURFACE RACEWAY ASSOCIATED WITH ITEMS IDENTIFIED FOR DEMOLITION AS INDICATED, ALONG WITH THEIR ASSOCIATED BOXES AND WIRING BACK TO NEAREST ACTIVE TO REMAIN JUNCTION BOX OR BRANCH CIRCUIT PANEL. REMOVE UNUSED BOXES. COORDINATE PATCHING AND PAINTING WITH DIVISION 09. PROVIDE MUD RINGS AND BLANK COVERS FOR UNUSED RECESSED BOXES TO REMAIN. ABANDON BELOW GRADE AND INACCESSIBLE RACEWAY IN PLACE AND RECORD LOCATIONS ON RECORD DRAWINGS REFER TO SPECIFICATION SECTION 262726 FOR ADDITIONAL INFORMATION.

FLAG NOTES

1 DEMOLISH EXISTING FIXTURE AND WIRING TO PANEL AND SWITCHES. LEAVE CONDUIT IN PLACE FOR REUSE.

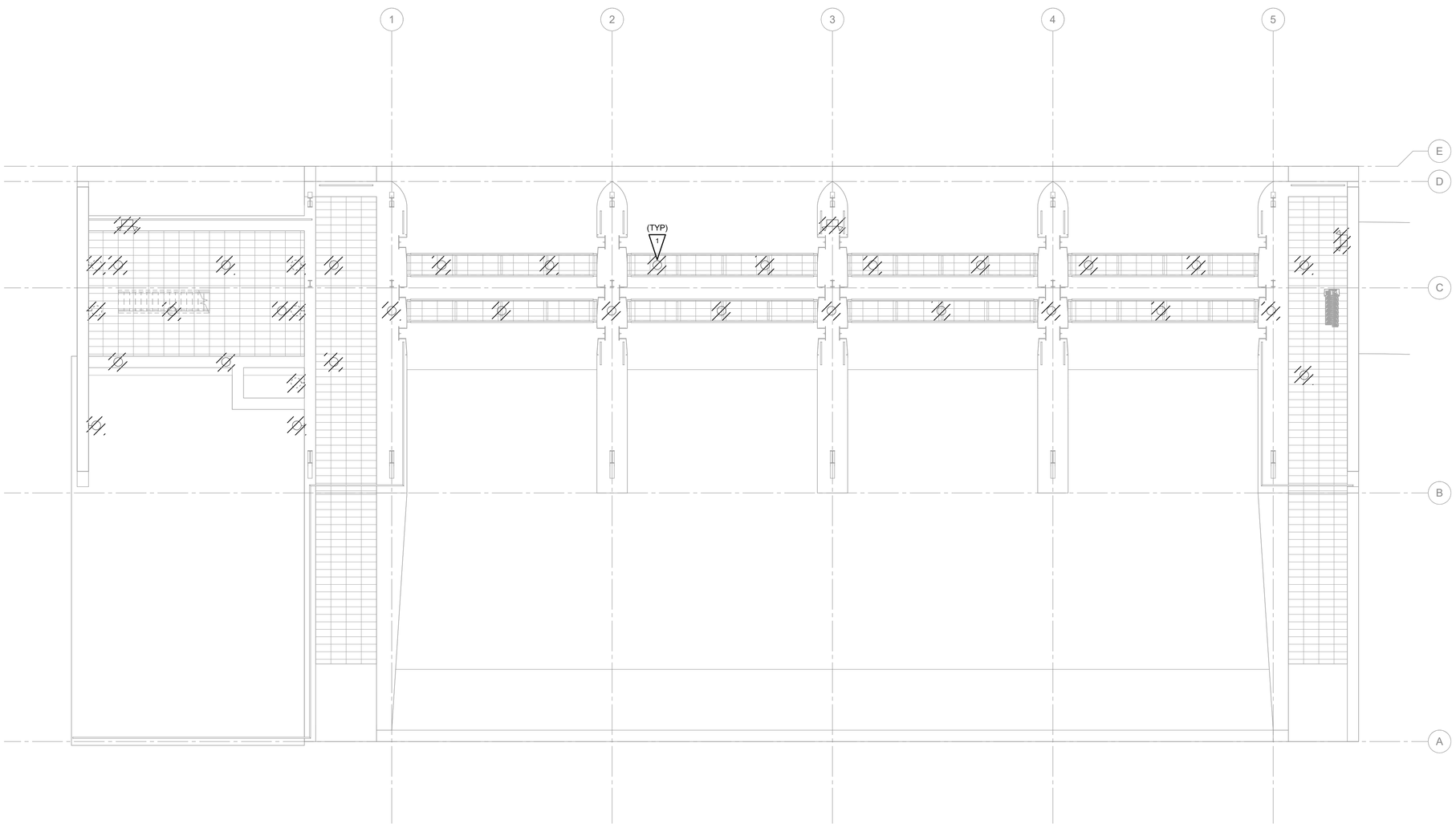

1 ED2.01 **ELECTRICAL LIGHTING PLAN LEVEL 1 - DEMOLITION**
SCALE: 1/8" = 1'-0"

HARGIS

Hargis Engineers, Inc.
1201 Third Ave, Suite 600
Seattle, WA 98101

t | 206.448.3376
f | 206.448.4450
w | hargis.biz

PRELIMINARY

NO.	DATE	BY	ISSUANCE
	12/20/2023		SD SET
	02/23/2024		DD SET

DES Washington State DEPARTMENT OF ENTERPRISE SERVICES

DEPARTMENT OF ECOLOGY State of Washington

ZOSEL DAM
OROVILLE, WA

ELECTRICAL LIGHTING PLAN LEVEL 1 - DEMOLITION

DRAWN:	SWS	PROJECT NO.:	23091.06
DESIGN:	MM	SCALE:	As indicated
CHECKED:	ES	DATE:	03/08/2024
DRAWING NO.	ED2.01		
SHEET NO.	23 OF 33		

NOT FOR CONSTRUCTION - NOT FOR CONSTRUCTION

3/6/2024 3:50:54 PM
C:\Revit Local\Revit Local R23\Zosel Dam_seth.stoothoff.rvt

SHEET NOTES

1. ELECTRICAL ITEMS SHOWN ARE DIAGRAMMATIC BASED ON AVAILABLE RECORD DRAWINGS AND SITE WALKS DURING THE DESIGN PERIOD. NOT ALL SYSTEM COMPONENTS ARE SHOWN. FIELD VERIFY DEVICE LOCATIONS AND QUANTITIES PRIOR TO COMMENCING WORK. REROUTE EXISTING-TO-REMAIN DEVICE CONDUIT AND WIRING AS REQUIRED.

2. REMOVE UNUSED SURFACE RACEWAY ASSOCIATED WITH ITEMS IDENTIFIED FOR DEMOLITION AS INDICATED, ALONG WITH THEIR ASSOCIATED BOXES AND WIRING BACK TO NEAREST ACTIVE TO REMAIN JUNCTION BOX OR BRANCH CIRCUIT PANEL. REMOVE UNUSED BOXES. COORDINATE PATCHING AND PAINTING WITH DIVISION 09. PROVIDE MUD RINGS AND BLANK COVERS FOR UNUSED RECESSED BOXES TO REMAIN. ABANDON BELOW GRADE AND INACCESSIBLE RACEWAY IN PLACE AND RECORD LOCATIONS ON RECORD DRAWINGS REFER TO SPECIFICATION SECTION 262726 FOR ADDITIONAL INFORMATION.

FLAG NOTES

1 DEMOLISH EXISTING FIXTURE AND WIRING TO PANEL AND SWITCH(ES). LEAVE CONDUIT IN PLACE FOR REUSE.

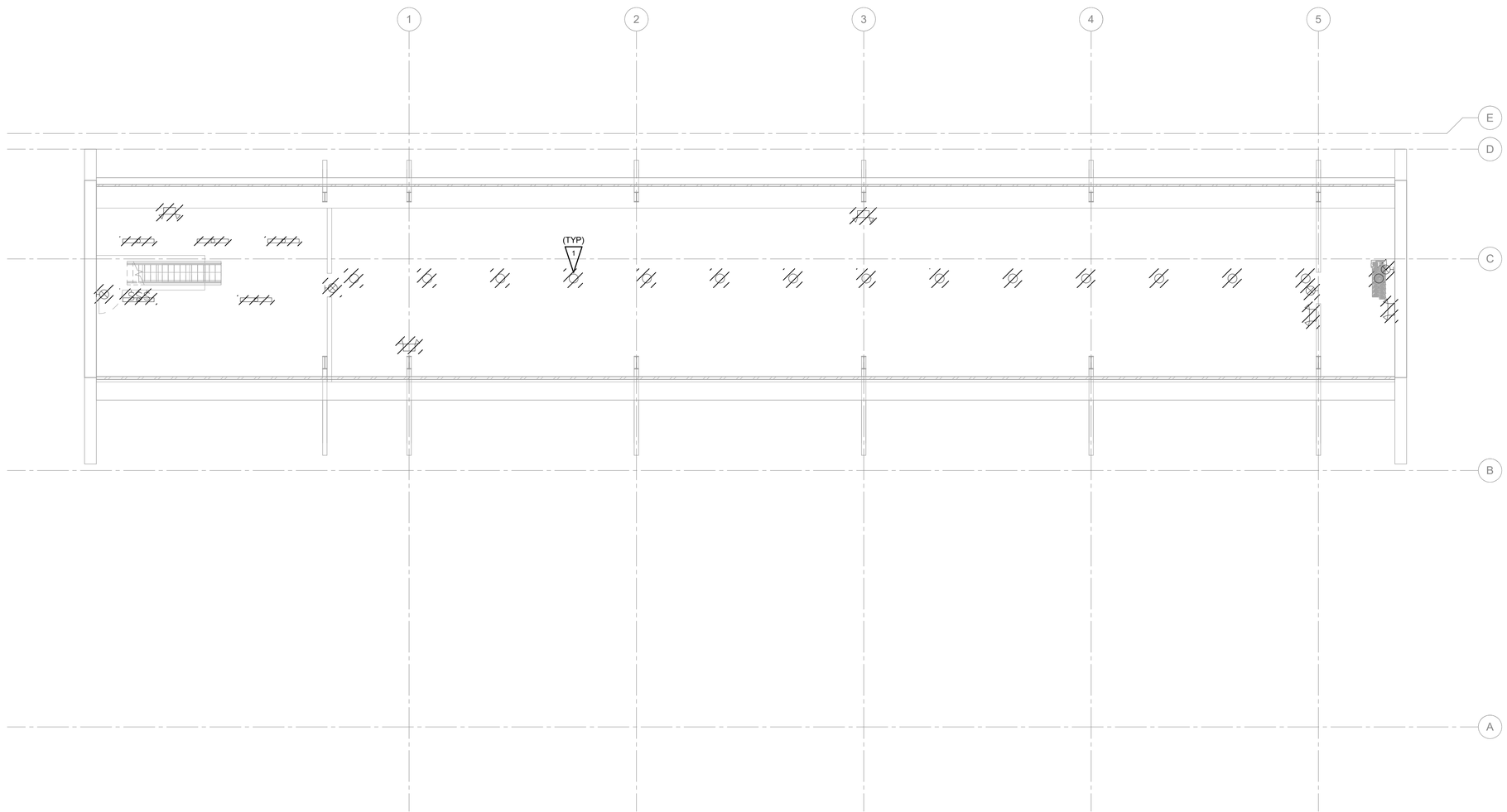

1 ED2.02 **ELECTRICAL LIGHTING PLAN LEVEL 2 - DEMOLITION**
SCALE: 1/8" = 1'-0"

HARGIS

Hargis Engineers, Inc.
1201 Third Ave, Suite 600
Seattle, WA 98101

t | 206.448.3376
f | 206.448.4450
w | hargis.biz

PRELIMINARY

NO.	DATE	BY	ISSUANCE
	12/20/2023		SD SET
	02/23/2024		DD SET

DES Washington State DEPARTMENT OF ENTERPRISE SERVICES

DEPARTMENT OF ECOLOGY State of Washington

ZOSEL DAM
OROVILLE, WA

ELECTRICAL LIGHTING PLAN LEVEL 2 - DEMOLITION

DRAWN:	SWS	PROJECT NO.:	23091.06
DESIGN:	MM	SCALE:	As indicated
CHECKED:	ES	DATE:	03/08/2024
DRAWING NO.	ED2.02		
SHEET NO.	24 OF 33		

NOT FOR CONSTRUCTION - NOT FOR CONSTRUCTION

3/6/2024 3:50:57 PM
C:\Revit Local\Revit Local R23\Zosel Dam_seth.stoothoff.rvt

SHEET NOTES

1. REFER TO LIGHT FIXTURE SCHEDULE ON SHEET E0.03 FOR ADDITIONAL INFORMATION.
2. COORDINATE LIGHT FIXTURE LOCATIONS AND MOUNTING WITH EQUIPMENT, PIPING AND DAM EQUIPMENT. ADJUST FIXTURE LOCATIONS TO AVOID CONFLICTS AND EFFECTIVELY LIGHT THE EQUIPMENT WORKSPACE. COORDINATE CONDUIT INSTALLATIONS WITH PIPING SYSTEMS AND PROVIDE OFFSETS AS REQUIRED. PROVIDE RED-LINE FIXTURE LOCATIONS ON RECORD DRAWINGS.

FLAG NOTES

1 DEMOLISH EXISTING FIXTURE AND WIRING TO PANEL AND SWITCH(ES). LEAVE CONDUIT IN PLACE FOR REUSE.

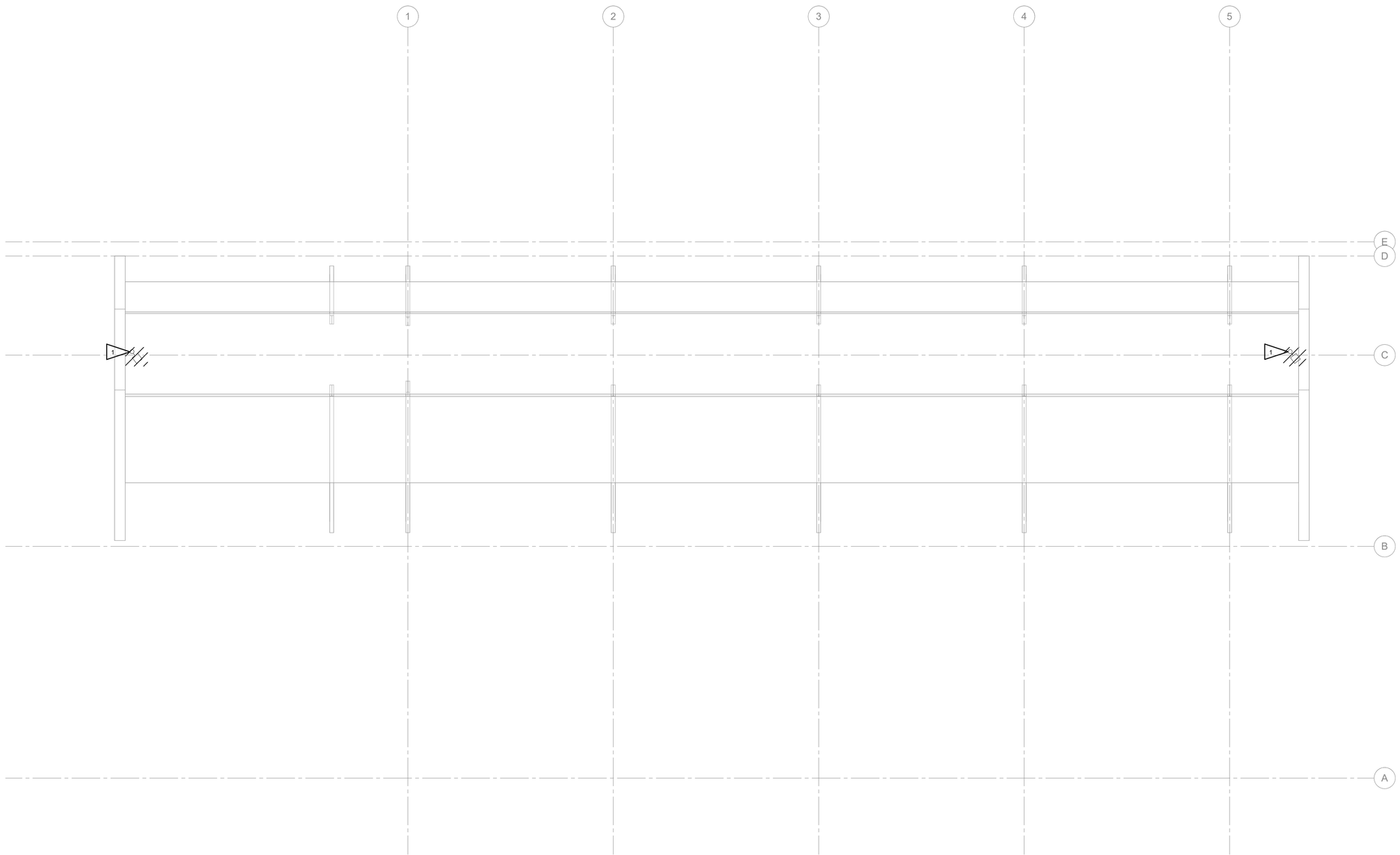

1 ED2.03 **ELECTRICAL LIGHTING PLAN ROOF Copy 1**
SCALE: 1/8" = 1'-0"

NOT FOR CONSTRUCTION - NOT FOR CONSTRUCTION

HARGIS

Hargis Engineers, Inc.
1201 Third Ave, Suite 600
Seattle, WA 98101

t | 206.448.3376
f | 206.448.4450
w | hargis.biz

PRELIMINARY

NO.	DATE	BY	ISSUANCE
	12/20/2023		SD SET
	02/23/2024		DD SET

DES Washington State DEPARTMENT OF ENTERPRISE SERVICES

DEPARTMENT OF ECOLOGY State of Washington

ZOSEL DAM
OROVILLE, WA

ELECTRICAL LIGHTING PLAN ROOF - DEMOLITION

DRAWN:	SWS	PROJECT NO.:	23091.06
DESIGN:	MM	SCALE:	As indicated
CHECKED:	ES	DATE:	03/08/2024
DRAWING NO.	ED2.03		
SHEET NO.	25 OF 33		

3/6/2024 3:51:01 PM
C:\Revit Local\Revit Local R23\Zosel Dam_seth.stoothoff.rvt

SHEET NOTES

1. ELECTRICAL ITEMS SHOWN ARE DIAGRAMMATIC BASED ON AVAILABLE RECORD DRAWINGS AND SITE WALKS DURING THE DESIGN PERIOD. NOT ALL SYSTEM COMPONENTS ARE SHOWN. FIELD VERIFY DEVICE LOCATIONS AND QUANTITIES PRIOR TO COMMENCING WORK. REROUTE EXISTING-TO-REMAIN DEVICE CONDUIT AND WIRING AS REQUIRED.

2. REMOVE UNUSED SURFACE RACEWAY ASSOCIATED WITH ITEMS IDENTIFIED FOR DEMOLITION AS INDICATED, ALONG WITH THEIR ASSOCIATED BOXES AND WIRING BACK TO NEAREST ACTIVE TO REMAIN JUNCTION BOX OR BRANCH CIRCUIT PANEL. REMOVE UNUSED BOXES. COORDINATE PATCHING AND PAINTING WITH DIVISION 09. PROVIDE MUD RINGS AND BLANK COVERS FOR UNUSED RECESSED BOXES TO REMAIN. ABANDON BELOW GRADE AND INACCESSIBLE RACEWAY IN PLACE AND RECORD LOCATIONS ON RECORD DRAWINGS REFER TO SPECIFICATION SECTION 262726 FOR ADDITIONAL INFORMATION.

FLAG NOTES

1. DEMOLISH CONDUIT, CONDUCTORS AND CONNECTION FROM EXISTING HOIST TO PNEUMATIC CONTROL PANEL AND MCC.
2. DEMOLISH CONDUIT, CONDUCTORS AND CONNECTION FROM EXISTING GATE HEATER TO SOURCE.
3. DEMOLISH GENERATOR, FUEL TANK, FUEL PIPING, CONDUIT, CONDUCTORS AND ALL ANCILLARY EQUIPMENT BACK TO MCC.
4. DEMOLISH CONDUIT AND CONDUCTORS FROM MCC TO EXISTING EQUIPMENT. DEMOLITION OF EQUIPMENT BY OTHERS.

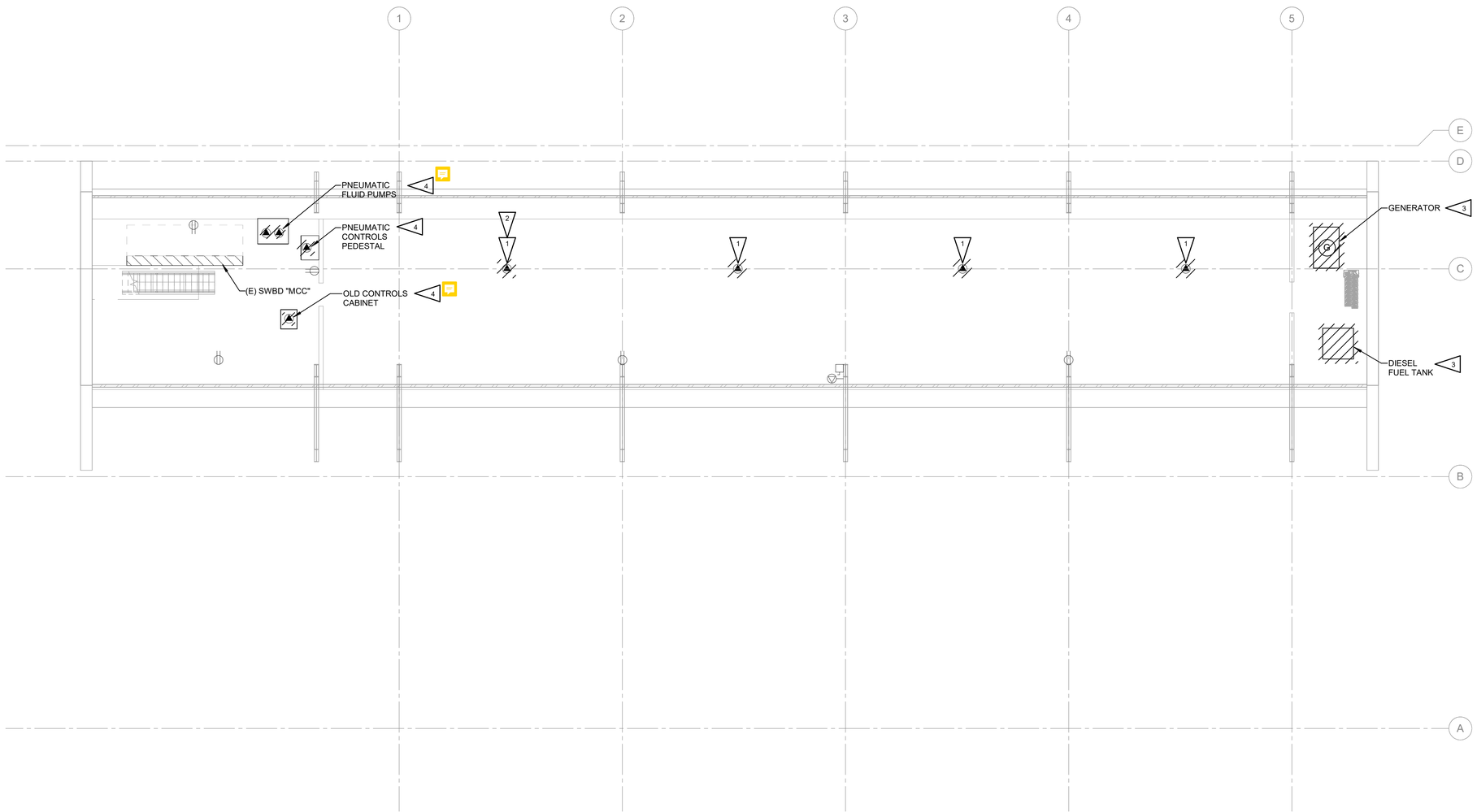

1 ED3.02 **ELECTRICAL POWER PLAN LEVEL 2 - DEMOLITION**
SCALE: 1/8" = 1'-0"

HARGIS

Hargis Engineers, Inc.
1201 Third Ave, Suite 600
Seattle, WA 98101

t | 206.448.3376
f | 206.448.4450
w | hargis.biz

PRELIMINARY

NO.	DATE	BY	ISSUANCE
	12/20/2023		SD SET
	02/23/2024		DD SET

DES Washington State DEPARTMENT OF ENTERPRISE SERVICES

DEPARTMENT OF ECOLOGY State of Washington

ZOSEL DAM
OROVILLE, WA

ELECTRICAL POWER PLAN LEVEL 2 - DEMOLITION

DRAWN:	SWS	PROJECT NO.:	23091.06
DESIGN:	MM	SCALE:	As indicated
CHECKED:	ES	DATE:	03/08/2024
DRAWING NO.	ED3.02		
SHEET NO.	26 OF 33		

NOT FOR CONSTRUCTION - NOT FOR CONSTRUCTION

3/6/2024 3:51:05 PM
C:\Revit Local\Revit Local R23\Zosel Dam_seth.stoothoff.rvt

SHEET NOTES

1. ELECTRICAL ITEMS SHOWN ARE DIAGRAMMATIC BASED ON AVAILABLE RECORD DRAWINGS AND SITE WALKS DURING THE DESIGN PERIOD. NOT ALL SYSTEM COMPONENTS ARE SHOWN. FIELD VERIFY DEVICE LOCATIONS AND QUANTITIES PRIOR TO COMMENCING WORK. REROUTE EXISTING-TO-REMAIN DEVICE CONDUIT AND WIRING AS REQUIRED TO SUPPORT REMODEL ACTIVITIES.

FLAG NOTES

1. DEMOLISH GENERATOR, FUEL TANK, FUEL PIPING, CONDUIT, CONDUCTORS AND ALL ANCILLARY EQUIPMENT BACK TO MCC.
2. REMOVE CONDUIT, CONDUCTORS AND MOUNTING HARDWARE FOR CIRCUITS TO EXISTING DAM PUMPS, GATES AND HEATERS AS SHOWN.
3. COORDINATE WITH OKANOGAN PUD FOR A UTILITY TRANSFORMER SHUTDOWN DISCONNECT EXISTING FEEDER FROM MCC, PROTECT AND KEEP IN PLACE FOR RECONNETION TO NEW DISTRIBUTION PANEL 'MDP'. SEE SHEET E3.1 AND E9.1 FOR ADDITIONAL INFORMATION. DEMOLISH UNUSED POTION OF CONDUIT.

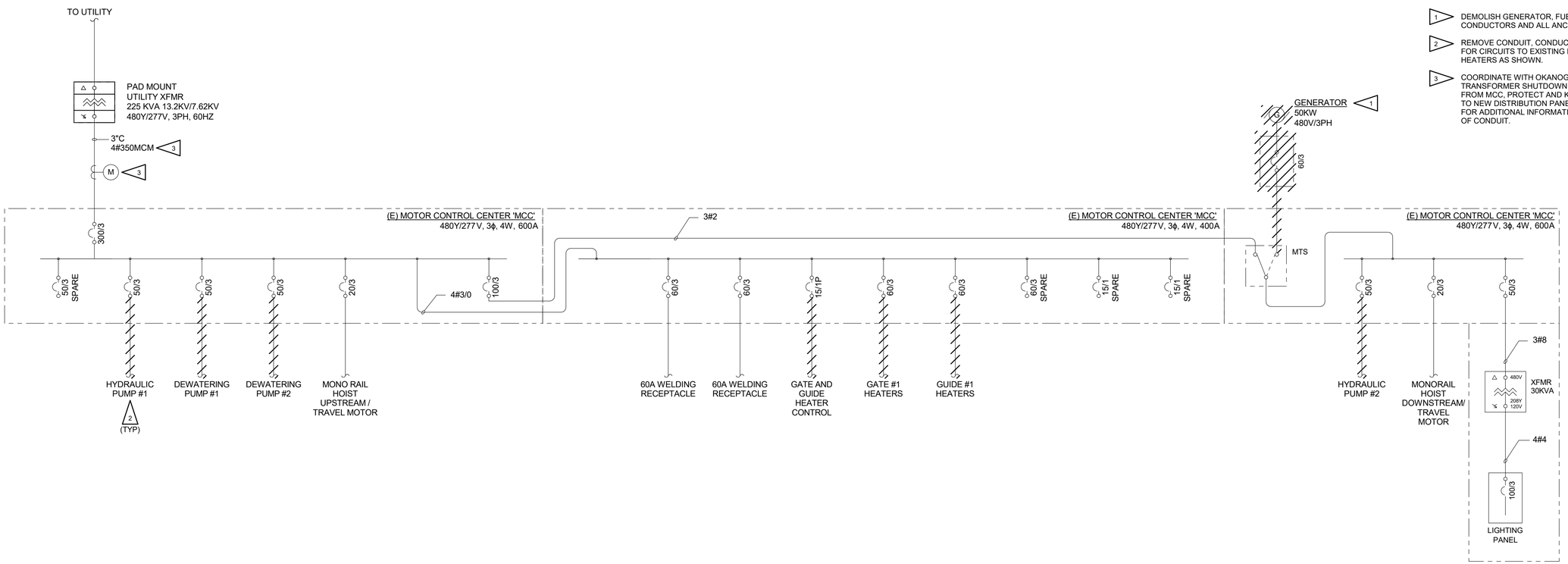

1 ED9.01 **ELECTRICAL ONE-LINE DIAGRAM - DEMOLITION**

NOT FOR CONSTRUCTION - NOT FOR CONSTRUCTION

HARGIS

Hargis Engineers, Inc.
1201 Third Ave, Suite 600
Seattle, WA 98101

t | 206.448.3376
f | 206.448.4450
w | hargis.biz

PRELIMINARY

NO.	DATE	BY	ISSUANCE
	12/20/2023		SD SET
	02/23/2024		DD SET

Washington State DEPARTMENT OF ENTERPRISE SERVICES

DEPARTMENT OF ECOLOGY State of Washington

ZOSEL DAM
OROVILLE, WA

ELECTRICAL ONE-LINE DIAGRAM - DEMOLITION

DRAWN:	SWS	PROJECT NO.:	23091.06
DESIGN:	MM	SCALE:	As indicated
CHECKED:	ES	DATE:	03/08/2024
DRAWING NO.	ED9.01		
SHEET NO.	27 OF 33		

3/6/2024 3:51:09 PM
C:\Revit Local\Revit Local R23\Zosel Dam_seth.stoothoff.rvt

SHEET NOTES

1. REFER TO LIGHT FIXTURE SCHEDULE ON SHEET E0.03 FOR ADDITIONAL INFORMATION.
2. COORDINATE LIGHT FIXTURE LOCATIONS AND MOUNTING WITH EQUIPMENT, PIPING AND DAM EQUIPMENT. ADJUST FIXTURE LOCATIONS TO AVOID CONFLICTS AND EFFECTIVELY LIGHT THE EQUIPMENT WORKSPACE. COORDINATE CONDUIT INSTALLATIONS WITH PIPING SYSTEMS AND PROVIDE OFFSETS AS REQUIRED. PROVIDE RED-LINE FIXTURE LOCATIONS ON RECORD DRAWINGS.
3. SEE SHEET E2.02 FOR LIGHT SWITCH CONTROLLING CIRCUIT a.

FLAG NOTES

1. PROVIDE FIXTURE AND CONDUCTORS TO PANEL IN EXISTING CONDUITS. INSTALL JUNCTION BOXES AND EXTEND CONDUIT TO NEW FIXTURE LOCATIONS WHERE REQUIRED.
2. LIGHT FIXTURE LOCATED IN STOP LOG/SUMP PUMP PIT BELOW THIS LEVEL.

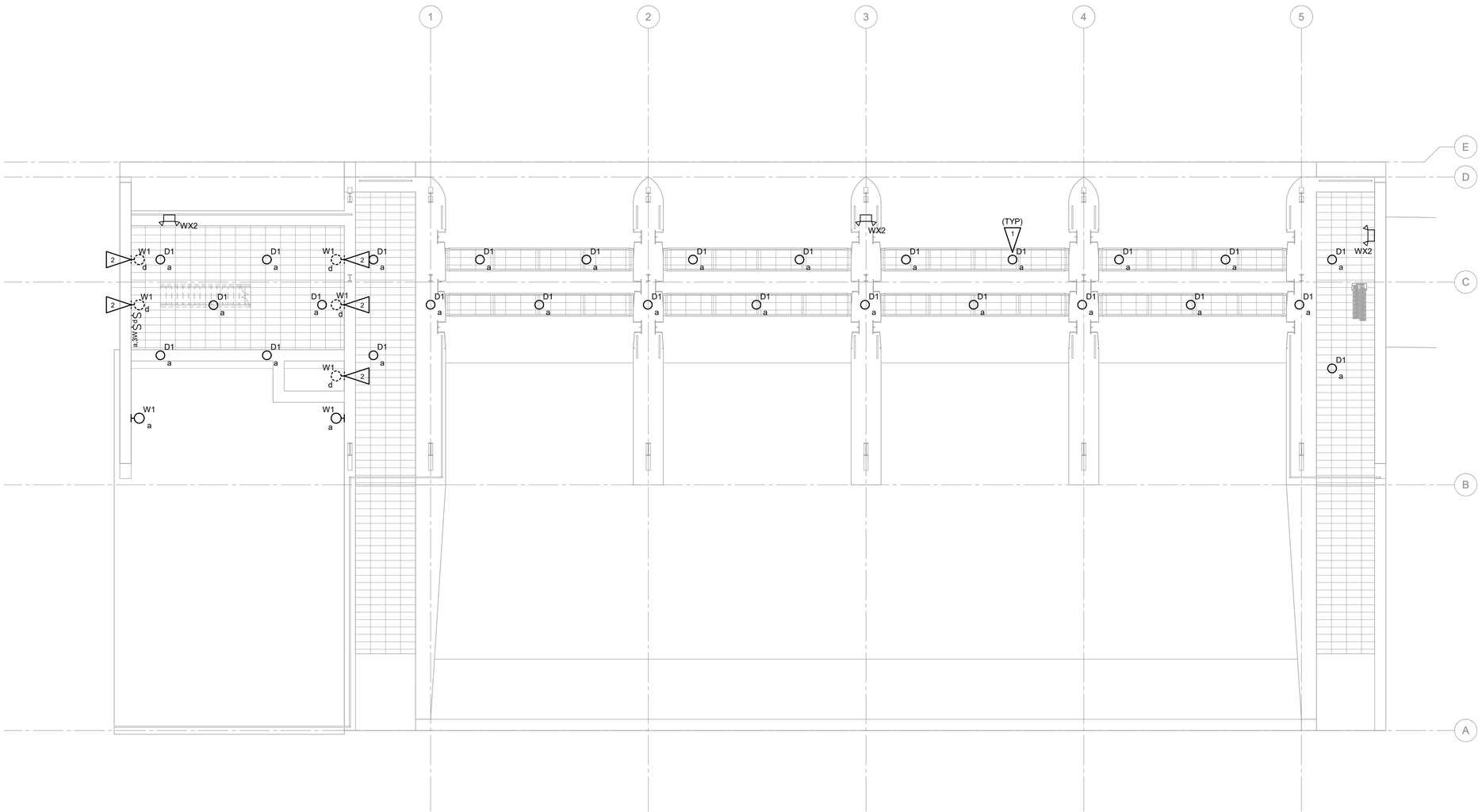

1 E2.01 **ELECTRICAL LIGHTING PLAN LEVEL 1**
SCALE: 1/8" = 1'-0"

HARGIS
Hargis Engineers, Inc.
1201 Third Ave, Suite 600
Seattle, WA 98101
t | 206.448.3376
f | 206.448.4450
w | hargis.biz

PRELIMINARY

NO.	DATE	BY	ISSUANCE
	12/20/2023		SD SET
	02/23/2024		DD SET

DES Washington State DEPARTMENT OF ENTERPRISE SERVICES

DEPARTMENT OF ECOLOGY State of Washington

ZOSEL DAM
OROVILLE, WA

ELECTRICAL LIGHTING PLAN LEVEL 1

DRAWN:	SWS	PROJECT NO.:	23091.06
DESIGN:	MM	SCALE:	As indicated
CHECKED:	ES	DATE:	03/08/2024
DRAWING NO.	E2.01		
SHEET NO.	28 OF 33		

NOT FOR CONSTRUCTION - NOT FOR CONSTRUCTION

3/6/2024 3:51:24 PM
C:\Revit Local\Revit Local R23\Zosel Dam_seth.stoothoff.rvt

SHEET NOTES

1. REFER TO LIGHT FIXTURE SCHEDULE ON SHEET E0.03 FOR ADDITIONAL INFORMATION.
2. COORDINATE LIGHT FIXTURE LOCATIONS AND MOUNTING WITH EQUIPMENT, PIPING AND DAM EQUIPMENT. ADJUST FIXTURE LOCATIONS TO AVOID CONFLICTS AND EFFECTIVELY LIGHT THE EQUIPMENT WORKSPACE. COORDINATE CONDUIT INSTALLATIONS WITH PIPING SYSTEMS AND PROVIDE OFFSETS AS REQUIRED. PROVIDE RED-LINE FIXTURE LOCATIONS ON RECORD DRAWINGS.

FLAG NOTES

1 PROVIDE FIXTURE MOUNTED WITH NEW STRUT RACK THAT SPANS THE GAP BETWEEN I-BEAMS. CONDUCTORS AND CONDUIT FROM FIXTURE TO SWITCH AND PANEL SHALL BE NEW.

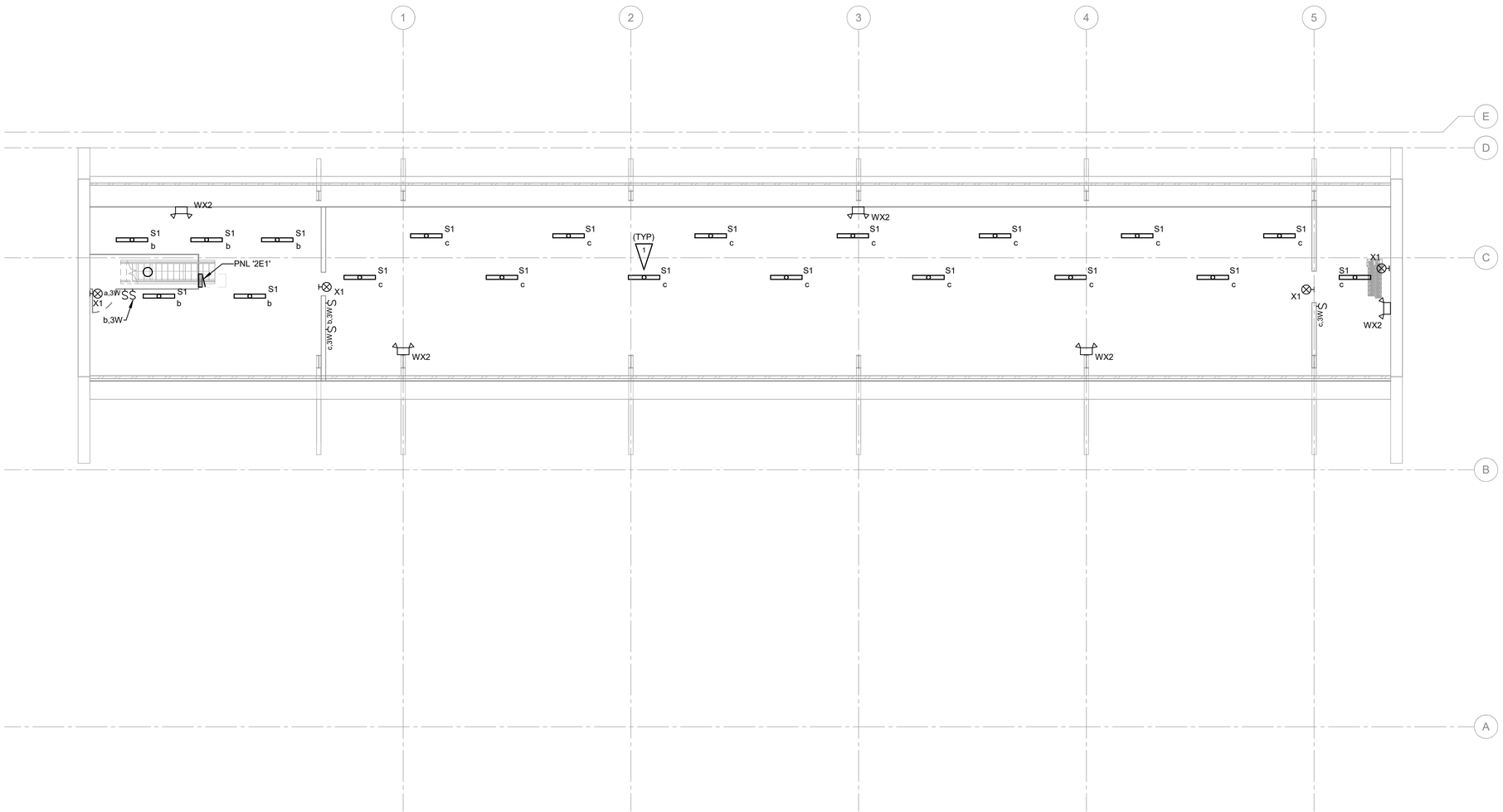

1 E2.02 **ELECTRICAL LIGHTING PLAN LEVEL 2**
SCALE: 1/8" = 1'-0"

HARGIS

Hargis Engineers, Inc.
1201 Third Ave, Suite 600
Seattle, WA 98101

t | 206.448.3376
f | 206.448.4450
w | hargis.biz

PRELIMINARY

NO.	DATE	BY	ISSUANCE
	12/20/2023		SD SET
	02/23/2024		DD SET

DES Washington State DEPARTMENT OF ENTERPRISE SERVICES

DEPARTMENT OF ECOLOGY State of Washington

ZOSEL DAM
OROVILLE, WA

ELECTRICAL LIGHTING PLAN LEVEL 2

DRAWN:	SWS	PROJECT NO.:	23091.06
DESIGN:	MM	SCALE:	As indicated
CHECKED:	ES	DATE:	03/08/2024
DRAWING NO.	E2.02		
SHEET NO.	29 OF 33		

NOT FOR CONSTRUCTION - NOT FOR CONSTRUCTION

3/6/2024 3:51:28 PM
C:\Revit Local\Revit Local R23\Zosel Dam_seth.stoothoff.rvt

SHEET NOTES

1. REFER TO LIGHT FIXTURE SCHEDULE ON SHEET E0.03 FOR ADDITIONAL INFORMATION.
2. COORDINATE LIGHT FIXTURE LOCATIONS AND MOUNTING WITH EQUIPMENT, PIPING AND DAM EQUIPMENT. ADJUST FIXTURE LOCATIONS TO AVOID CONFLICTS AND EFFECTIVELY LIGHT THE EQUIPMENT WORKSPACE. COORDINATE CONDUIT INSTALLATIONS WITH PIPING SYSTEMS AND PROVIDE OFFSETS AS REQUIRED. PROVIDE RED-LINE FIXTURE LOCATIONS ON RECORD DRAWINGS.

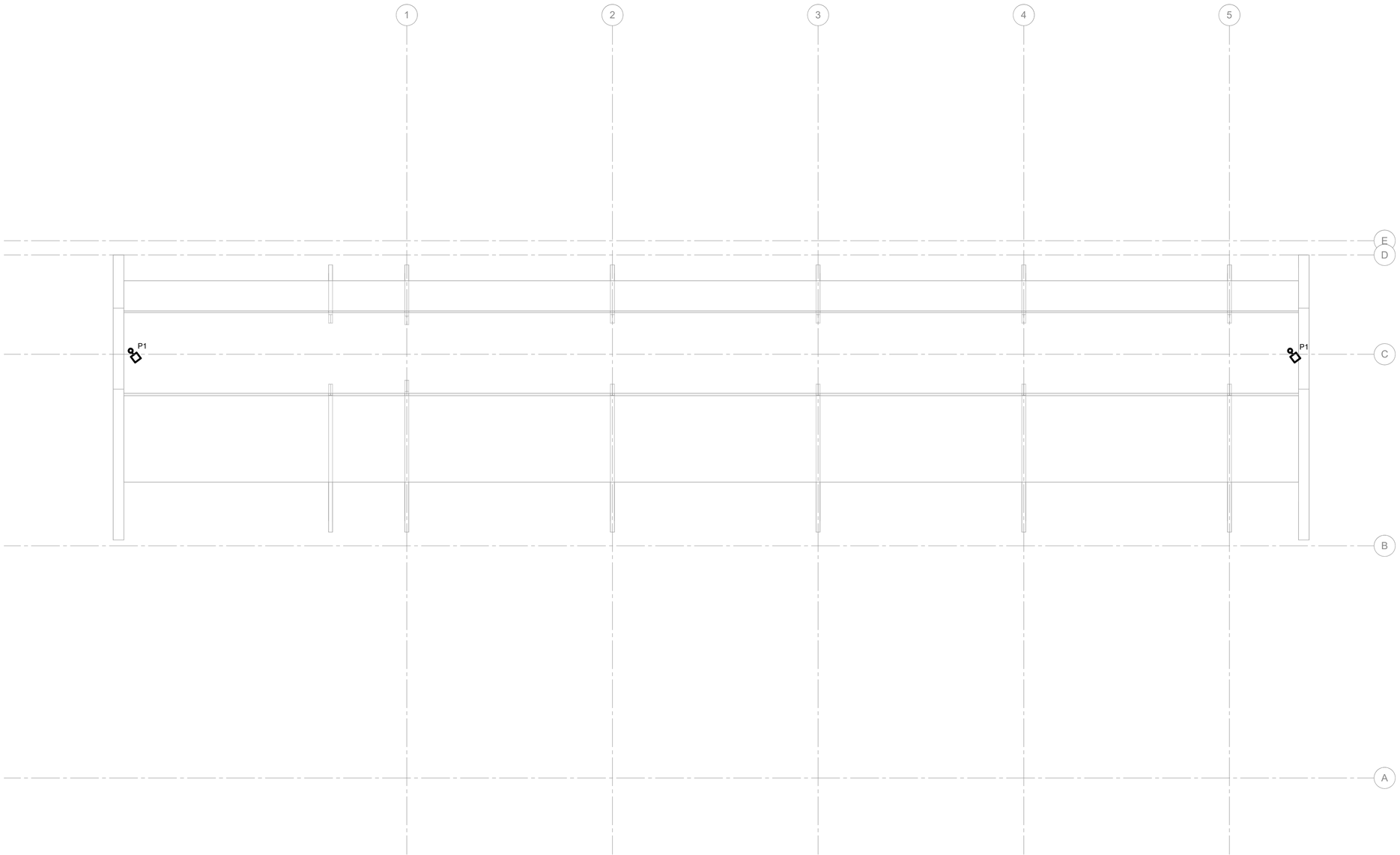

1 E2.03 **ELECTRICAL LIGHTING PLAN ROOF**
SCALE: 1/8" = 1'-0"

HARGIS

Hargis Engineers, Inc.
1201 Third Ave, Suite 600
Seattle, WA 98101

t | 206.448.3376
f | 206.448.4450
w | hargis.biz

PRELIMINARY

NO.	DATE	BY	ISSUANCE
	12/20/2023		SD SET
	02/23/2024		DD SET

DES Washington State DEPARTMENT OF ENTERPRISE SERVICES

DEPARTMENT OF ECOLOGY State of Washington

ZOSEL DAM
OROVILLE, WA

ELECTRICAL LIGHTING PLAN ROOF

DRAWN:	SWS	PROJECT NO.:	23091.06
DESIGN:	MM	SCALE:	As indicated
CHECKED:	ES	DATE:	03/08/2024
DRAWING NO.	E2.03		
SHEET NO.	30 OF 33		

NOT FOR CONSTRUCTION - NOT FOR CONSTRUCTION

3/6/2024 3:51:31 PM
C:\Revit Local\Revit Local R23\Zosel Dam_seth.stoothoff.rvt

SHEET NOTES

1. REFER TO SPECIFICATION SECTION 262726 AND ELECTRICAL DETAILS FOR DEVICE FACEPLATE LABELING.
2. REFER TO MECHANICAL EQUIPMENT SCHEDULE SHEET E00-03 FOR ADDITIONAL EQUIPMENT CHARACTERISTICS, REQUIREMENTS AND CIRCUIT INFORMATION.
3. COORDINATE FINAL LOCATION OF EQUIPMENT DISCONNECTS/CONTROLLERS WITH OTHER TRADES PRIOR TO ROUGH-IN. MAINTAIN CODE REQUIRED WORKING CLEARANCES. PROVIDE/CONSTRUCT STRUT CHANNEL ASSEMBLY FOR MOUNTING OF DISCONNECTS/CONTROLLERS WHICH CANNOT BE LOCATED ON BUILDING STRUCTURE. REFER TO DETAIL E07-01 FOR ADDITIONAL INFORMATION.

FLAG NOTES

1. PROVIDE WEATHERPROOF RECEPTACLE, CONDUIT AND WIRING TO PANEL.
2. PROVIDE GENERATOR, CONDUIT AND WIRING TO AUTOMATIC TRANSFER SWITCH. SEE SHEETS E3.02 AND E9.01 FOR ADDITIONAL REQUIREMENTS.
3. GENERATOR CONDUITS TO RUN ALONG RAILING AS SHOWN.
4. GENERATOR CONDUITS TO FOLLOW STRUCTURAL I-BEAM FROM GROUND LEVEL, THROUGH THE LEVEL 2 FLOOR TO THE ATS LOCATION SHOWN ON SHEET E3.02.
5. PROVIDE 3/4" DIAMETER, 10'-0" LONG, GROUND ROD THROUGH EXISTING CONCRETE.

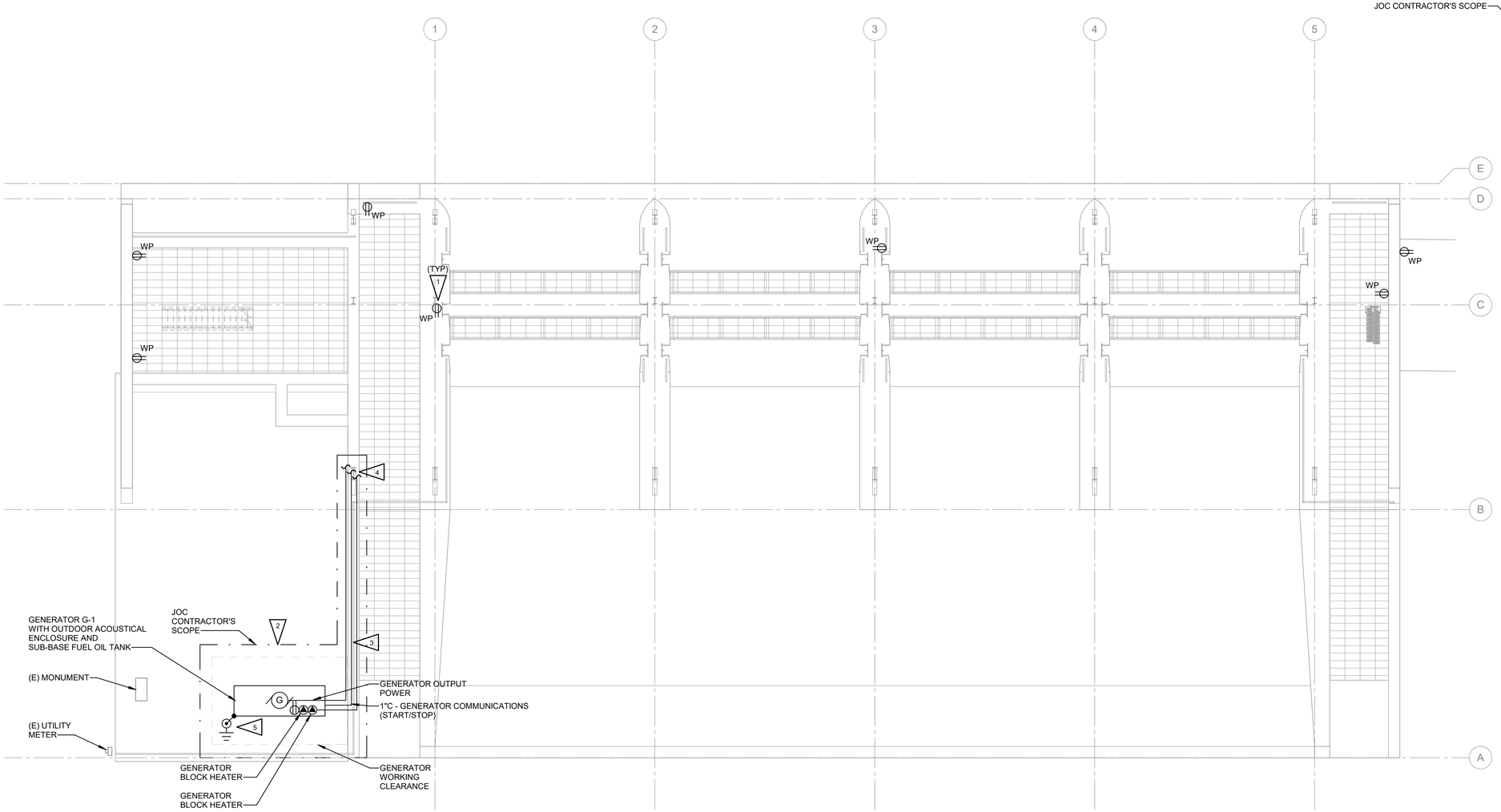

1 E3.01 **ELECTRICAL POWER PLAN LEVEL 1**
SCALE: 1/8" = 1'-0"

NOT FOR CONSTRUCTION - NOT FOR CONSTRUCTION

HARGIS
Hargis Engineers, Inc.
1201 Third Ave, Suite 600
Seattle, WA 98101
t | 206.448.3376
f | 206.448.4450
w | hargis.biz

PRELIMINARY

NO.	DATE	BY	ISSUANCE
	12/20/2023		SD SET
	02/23/2024		DD SET

DES Washington State DEPARTMENT OF ENTERPRISE SERVICES

DEPARTMENT OF ECOLOGY State of Washington

ZOSEL DAM
OROVILLE, WA

ELECTRICAL POWER PLAN LEVEL 1

DRAWN:	SWS	PROJECT NO.:	23091.06
DESIGN:	MM	SCALE:	As indicated
CHECKED:	ES	DATE:	03/08/2024
DRAWING NO.	E3.01		
SHEET NO.	31 OF 33		

3/6/2024 3:51:35 PM
C:\Revit Local\Revit Local R23\Zosel Dam_seth.stoolhoff.rvt

SHEET NOTES

1. REFER TO SPECIFICATION SECTION 262726 AND ELECTRICAL DETAILS FOR DEVICE FACEPLATE LABELING.
2. REFER TO MECHANICAL EQUIPMENT SCHEDULE SHEET E00-03 FOR ADDITIONAL EQUIPMENT CHARACTERISTICS, REQUIREMENTS AND CIRCUIT INFORMATION.
3. COORDINATE FINAL LOCATION OF EQUIPMENT DISCONNECTS/CONTROLLERS WITH OTHER TRADES PRIOR TO ROUGH-IN. MAINTAIN CODE REQUIRED WORKING CLEARANCES. PROVIDE/CONSTRUCT STRUT CHANNEL ASSEMBLY FOR MOUNTING OF DISCONNECTS/CONTROLLERS WHICH CANNOT BE LOCATED ON BUILDING STRUCTURE. REFER TO DETAIL E07-01 FOR ADDITIONAL INFORMATION.

FLAG NOTES

1. PROVIDE WEATHERPROOF RECEPTACLE, CONDUIT AND WIRING TO PANEL.
2. INSTALL ATS ON WALL AND INSTALL POWER WIRE AND RACEWAY FROM GENERATOR TO ATS. LEAVE ATS IN PLACE FOR OPEN BID CONTRACTOR TO TERMINATE NORMAL SOURCE AND LOAD SIDE CONDUCTORS AND CONDUITS. (JOC CONTRACTOR'S SCOPE)
3. PROVIDE MOUNTING RACK AND INSTALL PANELS AND TRANSFORMER ON RACK.
4. COORDINATE WITH EATON / CUTLER-HAMMER TO REPLACE AND/OR REPAIR EXISTING STATUS LIGHTS WITHIN MCC.
5. INSTALL DISTRIBUTION PANEL 'MDP' ON WALL. SEE SHEET E9.01 FOR ADDITIONAL INFORMATION.

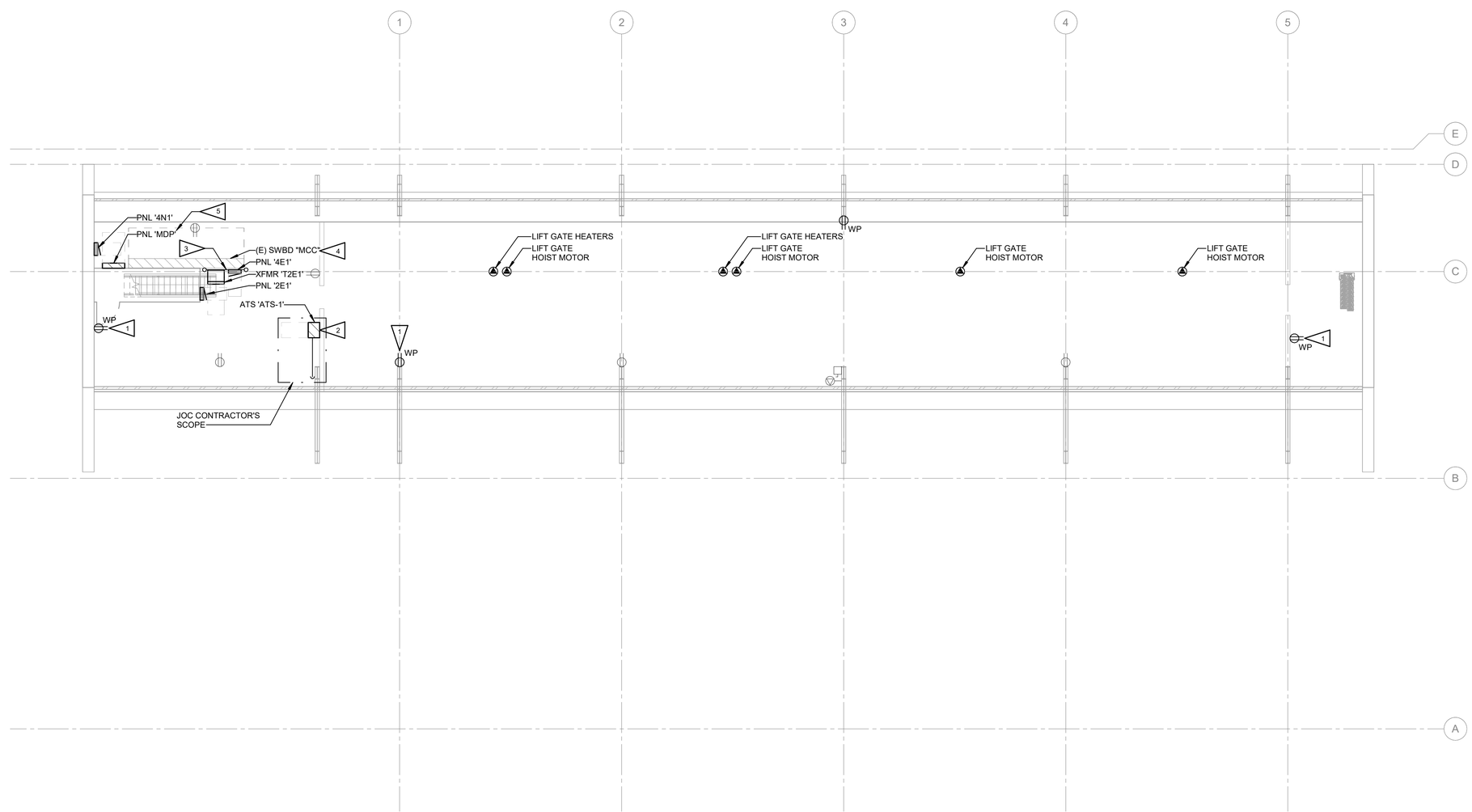

1 E3.02 **ELECTRICAL POWER PLAN LEVEL 2**
SCALE: 1/8" = 1'-0"

HARGIS
Hargis Engineers, Inc.
1201 Third Ave, Suite 600
Seattle, WA 98101
t | 206.448.3376
f | 206.448.4450
w | hargis.biz

PRELIMINARY

NO.	DATE	BY	ISSUANCE
	12/20/2023		SD SET
	02/23/2024		DD SET

DES Washington State DEPARTMENT OF ENTERPRISE SERVICES

DEPARTMENT OF ECOLOGY State of Washington

ZOSEL DAM
OROVILLE, WA

ELECTRICAL POWER PLAN LEVEL 2

DRAWN:	SWS	PROJECT NO.:	23091.06
DESIGN:	MM	SCALE:	As indicated
CHECKED:	ES	DATE:	03/08/2024
DRAWING NO.	E3.02		
SHEET NO.	32 OF 33		

NOT FOR CONSTRUCTION - NOT FOR CONSTRUCTION

3/6/2024 3:51:39 PM
C:\Revit Local\Revit Local R23\Zosel Dam_seth.stoothoff.rvt

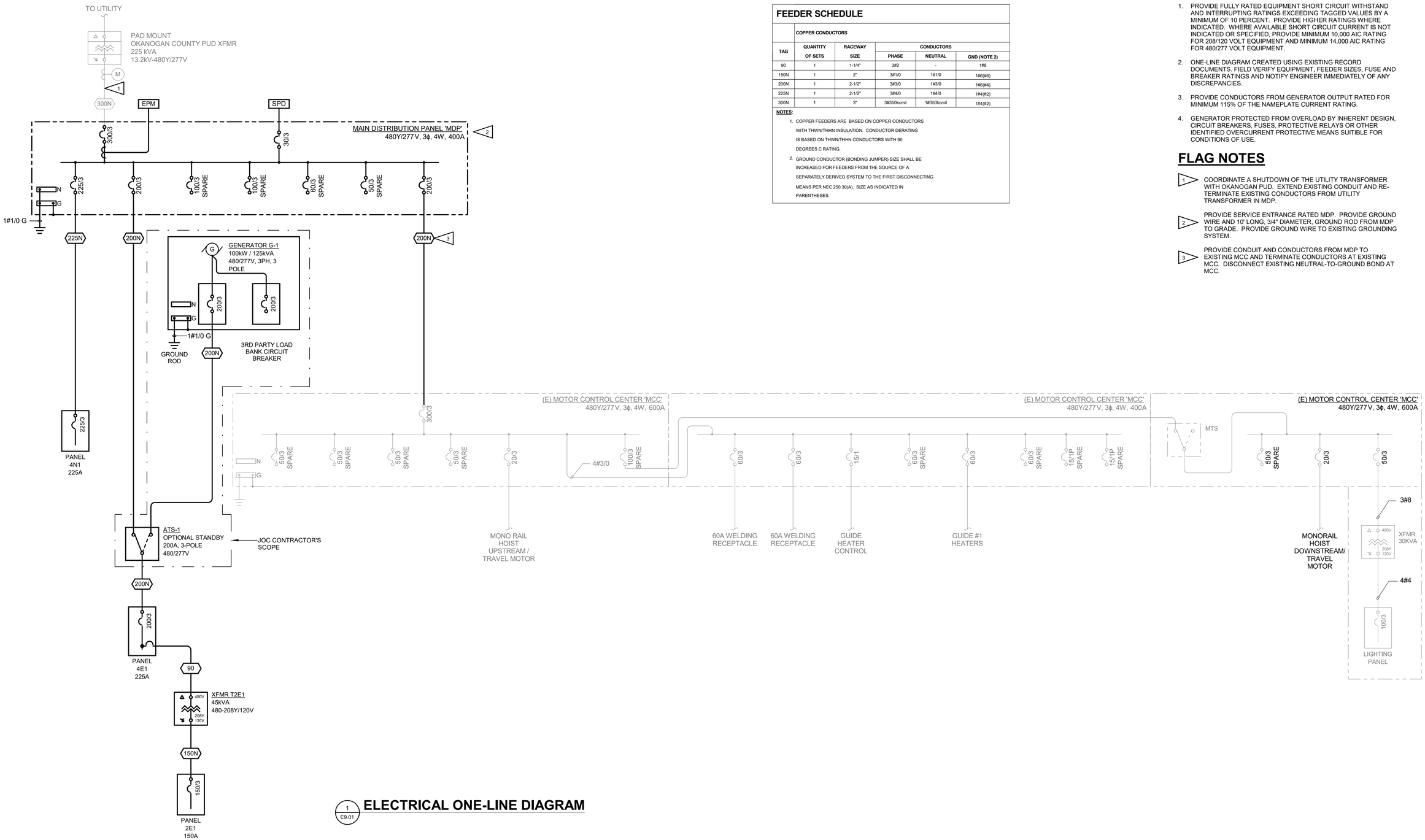

1 E9.01 **ELECTRICAL ONE-LINE DIAGRAM**

FEEDER SCHEDULE

TAG	QUANTITY OF SETS	RACEWAY SIZE	COPPER CONDUCTORS CONDUCTORS PHASE	NEUTRAL	GND (NOTE 2)
90	1	1-1/4"	3#2	-	1#8
150N	1	2"	3#1/0	1#1/0	1#6(#6)
200N	1	2-1/2"	3#3/0	1#3/0	1#6(#4)
225N	1	2-1/2"	3#4/0	1#4/0	1#4(#2)
300N	1	3"	3#350kcmil	1#350kcmil	1#4(#2)

NOTES:

1. COPPER FEEDERS ARE BASED ON COPPER CONDUCTORS WITH THWN/THHN INSULATION. CONDUCTOR DERATING IS BASED ON THWN/THHN CONDUCTORS WITH 90 DEGREES C RATING.
2. GROUND CONDUCTOR (BONDING JUMPER) SIZE SHALL BE INCREASED FOR FEEDERS FROM THE SOURCE OF A SEPARATELY DERIVED SYSTEM TO THE FIRST DISCONNECTING MEANS PER NEC 250.30(A). SIZE AS INDICATED IN PARENTHESES.

SHEET NOTES

1. PROVIDE FULLY RATED EQUIPMENT SHORT CIRCUIT WITHSTAND AND INTERRUPTING RATINGS EXCEEDING TAGGED VALUES BY A MINIMUM OF 10 PERCENT. PROVIDE HIGHER RATINGS WHERE INDICATED. WHERE AVAILABLE SHORT CIRCUIT CURRENT IS NOT INDICATED OR SPECIFIED, PROVIDE MINIMUM 10,000 AIC RATING FOR 208/120 VOLT EQUIPMENT AND MINIMUM 14,000 AIC RATING FOR 480/277 VOLT EQUIPMENT.
2. ONE-LINE DIAGRAM CREATED USING EXISTING RECORD DOCUMENTS. FIELD VERIFY EQUIPMENT, FEEDER SIZES, FUSE AND BREAKER RATINGS AND NOTIFY ENGINEER IMMEDIATELY OF ANY DISCREPANCIES.
3. PROVIDE CONDUCTORS FROM GENERATOR OUTPUT RATED FOR MINIMUM 115% OF THE NAMEPLATE CURRENT RATING.
4. GENERATOR PROTECTED FROM OVERLOAD BY INHERENT DESIGN, CIRCUIT BREAKERS, FUSES, PROTECTIVE RELAYS OR OTHER IDENTIFIED OVERCURRENT PROTECTIVE MEANS SUITIBLE FOR CONDITIONS OF USE.

FLAG NOTES

1. COORDINATE A SHUTDOWN OF THE UTILITY TRANSFORMER WITH OKANOGAN PUD. EXTEND EXISTING CONDUIT AND RE-TERMINATE EXISTING CONDUCTORS FROM UTILITY TRANSFORMER IN MDP.
2. PROVIDE SERVICE ENTRANCE RATED MDP. PROVIDE GROUND WIRE AND 10' LONG, 3/4" DIAMETER, GROUND ROD FROM MDP TO GRADE. PROVIDE GROUND WIRE TO EXISTING GROUNDING SYSTEM.
3. PROVIDE CONDUIT AND CONDUCTORS FROM MDP TO EXISTING MCC AND TERMINATE CONDUCTORS AT EXISTING MCC. DISCONNECT EXISTING NEUTRAL-TO-GROUND BOND AT MCC.

NOT FOR CONSTRUCTION - NOT FOR CONSTRUCTION

HARGIS
Hargis Engineers, Inc.
1201 Third Ave, Suite 600
Seattle, WA 98101
t | 206.448.3376
f | 206.448.4450
w | hargis.biz

PRELIMINARY

NO.	DATE	BY	ISSUANCE
	12/20/2023		SD SET
	02/23/2024		DD SET

Washington State DEPARTMENT OF ENTERPRISE SERVICES

DEPARTMENT OF ECOLOGY State of Washington

ZOSEL DAM
OROVILLE, WA

ELECTRICAL ONE-LINE DIAGRAM

DRAWN:	SWS	PROJECT NO.:	23091.06
DESIGN:	MM	SCALE:	As indicated
CHECKED:	ES	DATE:	03/08/2024
DRAWING NO.	E9.01		
SHEET NO.	33 OF 33		

3/6/2024 3:51:57 PM
C:\Revit Local\Revit Local R23\Zosel Dam_seth.stoothoff.rvt