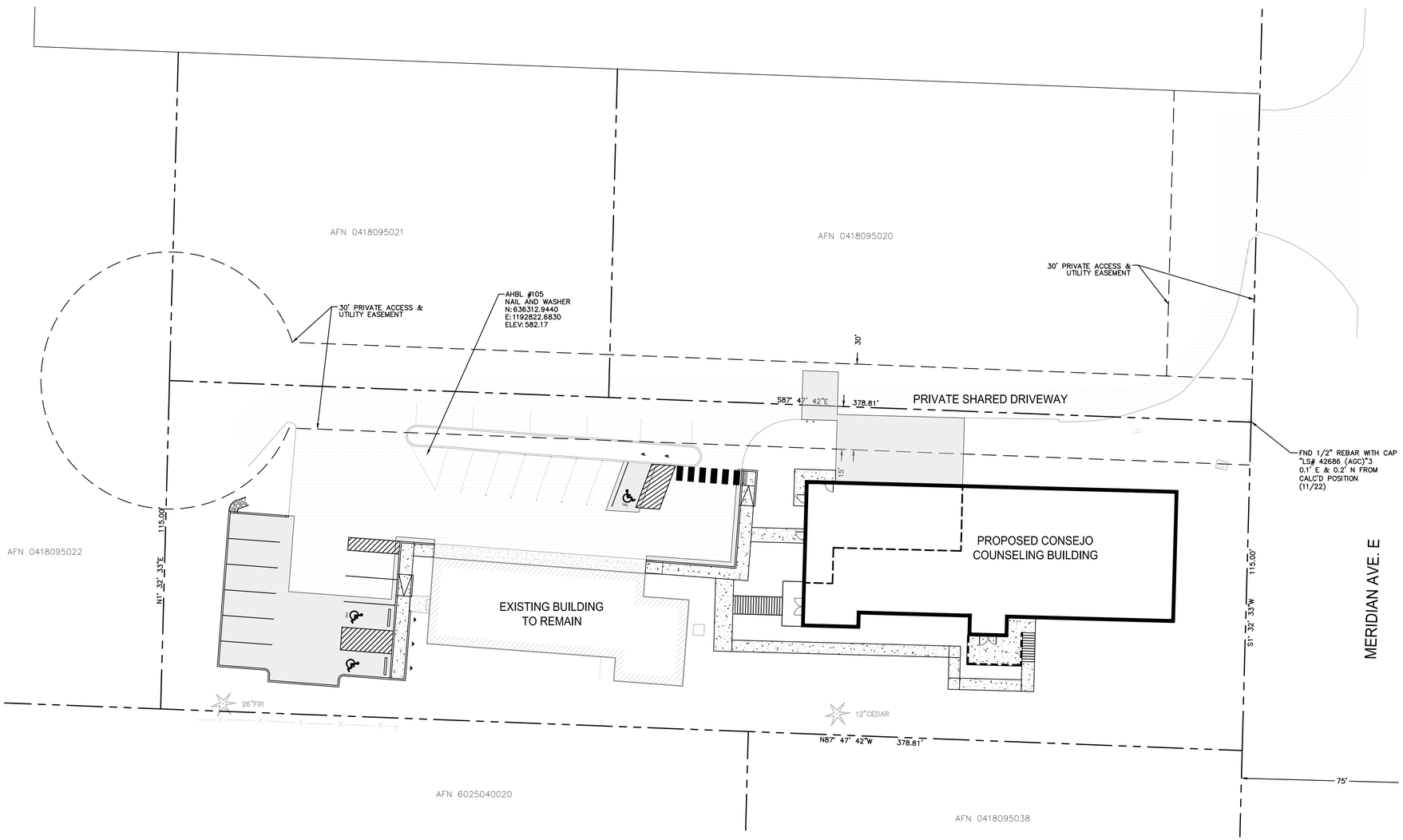

PUBLIC IMPROVEMENTS

XXXXX
PERMIT #

DEVELOPMENT ENGINEER

DATE

PIERCE COUNTY ORDINANCE NUMBER

1. CONTACT XXXX, THE AREA INSPECTOR, AT 253-798- XXXX TO COORDINATE THE PRE-CONSTRUCTION MEETING AND COUNTY INSPECTIONS. PRE-CONSTRUCTION MEETING SHALL BE REQUESTED AT LEAST 48-HOURS IN ADVANCE OF THE START OF CONSTRUCTION.
2. APPOINT A CERTIFIED EROSION AND SEDIMENT CONTROL LEAD WHO SHALL BE PROVIDED A COPY OF THE SWPPP, EROSION CONTROL PLAN & INSPECTION SCHEDULE.
3. FAILURE TO OBTAIN REQUIRED INSPECTIONS MAY ENDANGER OR DELAY PROJECT APPROVAL.
4. ALL WORK IN THE PUBLIC RIGHT-OF-WAY REQUIRES A GENERAL RIGHT-OF-WAY PERMIT FROM PIERCE COUNTY PLANNING AND PUBLIC WORKS.

VICINITY MAP

NOT TO SCALE

EXISTING LEGEND

- SECTION CORNER
- QUARTER SECTION CORNER
- CENTER SECTION
- FOUND MONUMENT AS NOTED
- SET NAIL AND WASHER
- FOUND REBAR AND CAP AS NOTED
- BOLLARD
- SIGN
- STORM CATCH BASIN
- ROOF DRAIN
- CABLE RISER
- GUY ANCHOR
- UTILITY POWER POLE
- LIGHT POLE
- FIRE HYDRANT
- IRRIGATION CONTROL VALVE
- WATER METER
- WATER VALVE
- CONIFEROUS TREE AS NOTED
- DECIDUOUS TREE AS NOTED
- RIGHT TURN ARROW
- D — STORM LINE
- OHP — FENCE
- ASPHALT
- CONCRETE

OWNER/APPLICANT

CONSEJO COUNSELING AND REFERRAL SERVICES
21120 MERIDIAN AVE E
GRAHAM, WA 98338
PHONE: (253) 285-4750
CONTACT: ROBERTO TERRONES
EMAIL:

CIVIL ENGINEER

ETHOS CIVIL
748 MARKET STREET
TACOMA, WA 98402
PHONE: (253) 318-8116
CONTACT: TREVOR MCDONALD
EMAIL: trevor@ethoscivil.com

SURVEYOR

AHBL
2215 NORTH 30TH STREET, SUITE 200
TACOMA, WA 98403
PHONE: (253) 383-2422
CONTACT: DAVID FOLLANSBEE
EMAIL: dfollansbee@AHBL.com

Know what's **below.**
Call before you dig.

ARCHITECT

WEDDERMANN ARCHITECTURE
4629 SOUTH YAKIMA
TACOMA, WA 98408
PHONE: (253) 973-6611
CONTACT: JENNIFER WEDDERMANN
EMAIL: JENNIFER@WEDDERMANN.COM

STRUCTURAL ENGINEER

AHBL
2215 NORTH 30TH STREET, SUITE 200
TACOMA, WA 98403
PHONE: (253) 383-2422
CONTACT: ANDY PFLUEGER
EMAIL: APFLUEGER@AHBL.COM

GEOTECHNICAL ENGINEER

SOUTH SOUND GEOTECHNICAL CONSULTING
P.O. BOX 39500
LAKEWOOD, WA 98496
PHONE: (253) 973-0515
CONTACT: TIMOTHY ROBERTS
EMAIL: TROBERTS@SSGEOTECHNICAL.COM

MECHANICAL ENGINEER

HULTZ BHU
1111 FAWCET AVENUE, SUITE 100
TACOMA, WA 98402
PHONE: (253) 383-3257
CONTACT: RICK HULTZ
EMAIL: RICKH@HULTZBHU.COM

PARCEL NUMBER

0418095011

SITE ADDRESS

21120 MERIDIAN AVENUE E
GRAHAM, WA 98338

VERTICAL DATUM

NAVD 1988 VERTICAL DATUM ON ORTHOMETRICALLY CORRECTED GPS OBSERVATIONS USING WSRN AND GEOID 2012B.

BASIS OF BEARING

NAD 1983/11
WASHINGTON STATE PLANE SOUTH PROJECTION, BASED ON GPS OBSERVATIONS USING WSRN AND GEOID 2012A. UNITS OF MEASUREMENT ARE US SURVEY FEET.

LEGAL DESCRIPTION

LOT 3 OF PIERCE COUNTY SHORT PLAT RECORDED UNDER PIERCE COUNTY AUDITOR'S FILE NUMBER 8108210171.

PIERCE COUNTY, WASHINGTON.

ZONING / SITE AREA

RURAL 10 / PARCEL AREA: 43,563 SF OR 1.069 AC.

FILL SPECIFICATION

FILL MATERIAL SHALL NOT CONTAIN PETROLEUM PRODUCTS, OR SUBSTANCES WHICH ARE HAZARDOUS, DANGEROUS, TOXIC, OR WHICH OTHERWISE VIOLATE ANY STATE, FEDERAL, OR LOCAL LAW, ORDINANCE, CODE, REGULATION, RULE, ORDER, OR STANDARD.

TRENCH NOTE

IF WORKERS ENTER ANY TRENCH OR OTHER EXCAVATION FOUR OR MORE FEET IN DEPTH THAT DOES NOT MEET THE OPEN PIT REQUIREMENTS OF WSDOT SECTION 2-09.3(3)B, IT SHALL BE SHORED AND CRIBBED. THE CONTRACTOR ALONE SHALL BE RESPONSIBLE FOR WORKER SAFETY AND ETHOS CIVIL ASSUMES NO RESPONSIBILITY. ALL TRENCH SAFETY SYSTEMS SHALL MEET THE REQUIREMENTS OF THE WASHINGTON INDUSTRIAL SAFETY AND HEALTH ACT, CHAPTER 49.17 RCW.

TOPOGRAPHIC NOTE

THE EXISTING CULTURAL AND TOPOGRAPHIC DATA SHOWN ON THESE DRAWINGS HAS BEEN PREPARED, IN PART, BASED UPON INFORMATION FURNISHED BY OTHERS. WHILE THIS INFORMATION IS BELIEVED TO BE RELIABLE, ETHOS CIVIL CANNOT ENSURE ACCURACY AND THUS IS NOT RESPONSIBLE FOR THE ACCURACY OF THAT INFORMATION OR FOR ANY ERRORS OR OMISSIONS WHICH MAY HAVE BEEN INCORPORATED INTO THESE DRAWINGS AS A RESULT.

UTILITY NOTE

THE LOCATIONS OF EXISTING UNDERGROUND UTILITIES ARE APPROXIMATE ONLY AND HAVE NOT BEEN INDEPENDENTLY VERIFIED BY THE OWNER OR ITS REPRESENTATIVE, THE CONTRACTOR SHALL DETERMINE THE EXACT LOCATION OF ALL EXISTING UTILITIES BEFORE COMMENCING WORK AND AGREES TO BE FULLY RESPONSIBLE FOR ANY AND ALL DAMAGES THAT INCUR DUE TO THE CONTRACTOR'S FAILURE TO LOCATE EXACTLY AND PRESERVE ANY AND ALL UNDERGROUND UTILITIES. ETHOS CIVIL ASSUMES NO LIABILITY FOR THE LOCATION OF UNDERGROUND UTILITIES.

AS-BUILT NOTE

CONTRACTOR SHALL FURNISH AS-BUILT RIM ELEVATIONS, PIPE INVERT ELEVATIONS, AND STRUCTURE LOCATIONS (COORDINATES) TO THE NEAREST 0.01 FOOT FOR ALL STORM DRAINAGE AND UTILITY STRUCTURES, AND AS-BUILT SLOPE MEASUREMENTS TO THE NEAREST 0.01% FOR ALL CURB RAMP AND LANDING PANEL JOINTS. CONTRACTOR SHALL ENGAGE WITH A PROFESSIONAL LAND SURVEYOR LICENSED IN THE STATE OF WASHINGTON TO FURNISH AS-BUILT INFORMATION.

AUTOCAD FILE

AN AUTOCAD DRAWING FILE IS AVAILABLE TO ASSIST WITH SITE LAYOUT. PLEASE NOTE THAT ELECTRONIC FILES ARE PROVIDED FOR CONTRACTOR'S CONVENIENCE AND SHALL NOT REPLACE NOR BE USED TO SUBSTITUTE THE CONTRACT DOCUMENTS. THE CONTRACTOR IS RESPONSIBLE FOR PROJECT LAYOUT ACCORDING TO CONTRACT DOCUMENTS AND COST FOR ELECTRONIC AUTOCAD FILES.

CONTACT: JOHN BABB
EMAIL: john@ethoscivil.com
PHONE: (253) 245-9919

N

30 15 0 30 60

SCALE IN FEET

SHEET INDEX

NUMBER	TITLE
C0.0	COVER SHEET
C1.0	DEMOLITION & TESC PLAN
C2.0	GRADING & UTILITY PLAN
C2.1	GRADING & UTILITY NOTES & DETAILS
C3.0	HORIZONTAL CONTROL & PAVING PLAN
C3.1	HORIZONTAL CONTROL & PAVING PLAN NOTES & DETAILS

CONSEJO COUNSELING

21120 MERIDIAN AVENUE E
GRAHAM, WA 98338

PERMIT SET

ETHOS CIVIL
Engineering Entitlement Project Management
ethoscivil.com info@ethoscivil.com 253.414.1989

TREVOR JAMES MCDONALD
STATE OF WASHINGTON
57658
REGISTERED PROFESSIONAL ENGINEER
02.06.2024

© 2022 Ethos Civil LLC. All rights reserved. No part of this document may be reproduced in any form without permission from Ethos Civil LLC.

DESIGNED ###
CHECKED ###
DRAWN ###
CHECKED ###

#	DATE	DESCRIPTION

22133
02.06.2024

COVER SHEET

C0.0

PLOTTED: 2/6/2024 12:37:22 PM PBLE, 22133-SHACKOR.DWG | LAST SAVED BY: TREVOR

DEMOLITION NOTES

1. DEMOLITION: IT IS THE INTENT OF THE WORK UNDER THIS CONTRACT TO INCLUDE THE DEMOLITION OF ALL EXISTING BUILDINGS, PAVING, UTILITIES AND OTHER EXISTING SITE IMPROVEMENTS INCLUDING THEIR UNDERGROUND COMPONENTS AS INDICATED BY THIS DRAWING AND AS REQUIRED FOR NEW CONSTRUCTION. IT IS THE CONTRACTOR'S RESPONSIBILITY TO FULLY REVIEW THE SITE CONDITIONS AND TO CORRELATE THESE OBSERVATIONS WITH THE PROJECT WORK AND INCLUDE ALL NECESSARY DEMOLITION, WHETHER SHOWN OR NOT, AND INCLUDE ALL SUCH COSTS IN THE BASE BID.
2. CLEARING: IT IS THE INTENT OF THE WORK UNDER THIS CONTRACT TO CONDUCT ALL CLEARING NECESSARY TO BE ABLE TO COMPLETE ALL THE WORK OF THIS PROJECT.
3. CONTRACTOR SHALL LEGALLY DISPOSE OF THE OWNER'S PROPERTY, ALL DEMOLISHED AND REMOVED MATERIALS, UNLESS INDICATED OTHERWISE.
4. IT IS THE RESPONSIBILITY OF THE CONTRACTOR FOR ENSURING THAT ALL UTILITIES HAVE BEEN DISCONNECTED PRIOR TO COMMENCING DEMOLITION. CONTRACTOR SHALL COORDINATE UTILITY DEMOLITION WITH NEW CONSTRUCTION.
5. COORDINATE POWER DEMOLITION WITH UTILITY PURVEYOR AND ELECTRICAL PLANS. CONTRACTOR TO ENSURE THAT DEMOLITION OF LINES WILL NOT COMPROMISE POWER TO OTHER AREAS.
6. UTILITIES TO BE ABANDONED SHALL BE CAPPED. CONTRACTOR SHALL AS-BUILT LOCATION.
7. ALL MONUMENTS DISTURBED AS A RESULT OF CONSTRUCTION ACTIVITIES SHALL BE REPLACED PER WAC 332-120 AT NO ADDITIONAL COST TO THE OWNER. CONTRACTOR SHALL APPLY FOR PERMIT FROM THE DEPARTMENT OF NATURAL RESOURCES AS NECESSARY.
8. CONTRACTOR SHALL ENSURE THAT ADEQUATE FIRE PROTECTION ACCESS IS PROVIDED TO SITE AND EXISTING STRUCTURES TO REMAIN. CONTRACTOR SHALL ALSO PROVIDE ADEQUATE FIRE PROTECTION FOR THE NEW BUILDING.
9. CONTRACTOR SHALL MINIMIZE DUST GENERATION ONSITE BY SPRINKLING THE SITE WITH WATER UNTIL SURFACE IS WET. SEE BMP C140.
10. SAWCUT CONCRETE SIDEWALK AT THE NEAREST JOINT.

HYDROSEEDING NOTES

1. HYDROSEEDING SHALL BE APPLIED TO ALL DISTURBED NON-PAVED SURFACES, UNLESS NOTED OTHERWISE.
2. HYDROSEEDING SHALL CONSIST OF BENTGRASS AND SHALL BE APPLIED AT A RATE OF 120 LBS/ACRE.
3. HYDROSEED SHALL INCLUDE A MINIMUM OF 1500 LBS/ACRE OF MULCH WITH 3% TACKIFIER. IT SHALL ALSO INCLUDE A 10-4-6 FERTILIZER AT A RATE OF 90 LBS/ACRE.
4. SEED BEDS PLANTED BETWEEN MAY 1 AND OCTOBER 31 WILL REQUIRE IRRIGATION AND OTHER MAINTENANCE AS NECESSARY TO FOSTER AND PROTECT THE ROOT STRUCTURE.
5. FOR SEED BEDS PLANTED BETWEEN OCTOBER 31 AND APRIL 30, ARMORING OF THE SEED BED WILL BE NECESSARY TO FOSTER AND PROTECT THE ROOT STRUCTURE (E.G. GEOTEXTILES, JUTE MAT, CLEAR PLASTIC COVERING).
6. BEFORE SEEDING, INSTALL ALL REQUIRED SURFACE RUNOFF CONTROL MEASURES SUCH AS GRADIENT TERRACES, INTERCEPTOR DIKES, SWALES, LEVEL SPREADERS, AND SEDIMENTATION BASINS.
7. THE SEED BED SHALL BE FIRM WITH A FAIRLY FINE SURFACE, FOLLOWING SURFACE ROUGHENING. PERFORM ALL OPERATIONS ACROSS OR AT RIGHT ANGLES TO THE SLOPE.
8. FERTILIZERS ARE TO BE USED ACCORDING TO SUPPLIERS RECOMMENDATIONS. AMOUNTS USED SHOULD BE MINIMIZED, ESPECIALLY ADJACENT TO WATER BODIES AND WETLANDS.
9. HYDROSEED SHALL NOT BE APPLIED TO AREAS SUBJECT TO WEAR BY CONSTRUCTION TRAFFIC.

TESC NOTES

1. ALL LIMITS OF CLEARING AND AREAS OF VEGETATION PRESERVATION AS PRESCRIBED ON THESE PLANS SHALL BE CLEARLY FLAGGED IN THE FIELD AND OBSERVED DURING CONSTRUCTION.
2. ALL TEMPORARY SEDIMENTATION AND EROSION CONTROL MEASURES, AND PROTECTIVE MEASURES FOR CRITICAL AREAS AND SIGNIFICANT TREES SHALL BE INSTALLED PRIOR TO INITIATING ANY CONSTRUCTION ACTIVITIES.
3. ALL REQUIRED SEDIMENTATION AND EROSION CONTROL FACILITIES MUST BE CONSTRUCTED AND IN OPERATION PRIOR TO ANY LAND CLEARING AND/OR OTHER CONSTRUCTION ACTIVITIES TO ENSURE THAT SEDIMENT LADEN WATER DOES NOT ENTER ANY EXISTING DRAINAGE SYSTEM. THE CONTRACTOR SHALL SCHEDULE AN INSPECTION OF THE EROSION CONTROL FACILITIES PRIOR TO ANY LAND CLEARING AND/OR OTHER CONSTRUCTION. ALL EROSION AND SEDIMENT CONTROL FACILITIES SHALL BE MAINTAINED IN A SATISFACTORY CONDITION UNTIL SUCH TIME THAT CLEARING AND/OR CONSTRUCTION IS COMPLETED AND THE POTENTIAL FOR ON-SITE EROSION HAS PASSED. THE IMPLEMENTATION, MAINTENANCE, REPLACEMENT, AND ADDITIONS TO THE EROSION AND SEDIMENTATION CONTROL MEASURES SHALL BE THE RESPONSIBILITY OF THE CONTRACTOR.
4. THE EROSION AND SEDIMENTATION CONTROL SYSTEM MEASURES DEPICTED ON THESE PLANS ARE INTENDED TO BE MINIMUM REQUIREMENTS TO MEET ANTICIPATED SITE CONDITIONS. AS CONSTRUCTION PROGRESSES AND UNEXPECTED OR SEASONAL CONDITIONS DICTATE, ADDITIONAL MEASURES MAY BE NECESSARY TO ENSURE COMPLETE SILTATION CONTROL ON THE SITE. DURING THE COURSE OF CONSTRUCTION, IT SHALL BE THE OBLIGATION AND RESPONSIBILITY OF THE CONTRACTOR TO ADDRESS ANY NEW CONDITIONS THAT MAY BE CREATED BY CONSTRUCTION RELATED ACTIVITIES AND TO PROVIDE ADDITIONAL FACILITIES, OVER AND ABOVE THE MINIMUM REQUIREMENTS, AS MAY BE NEEDED TO PROTECT ADJACENT SITES, SENSITIVE AREAS, NATURAL WATER COURSES, AND/OR STORM DRAINAGE SYSTEMS.
5. ANY DISTURBED AREA WHICH HAS BEEN STRIPPED OF VEGETATION AND WHERE NO FURTHER WORK IS ANTICIPATED FOR A PERIOD OF 10 DAYS OR MORE DURING THE DRY SEASON (MAY 1-SEPT 30) OR 5 DAYS OR MORE IN THE WET SEASON (OCT 1-APRIL 30), SHALL BE IMMEDIATELY STABILIZED WITH MULCHING, GRASS PLANTING, OR OTHER APPROVED EROSION CONTROL TREATMENT APPLICABLE TO THE TIME OF YEAR IN QUESTION. GRASS SEEDING ALONE WILL BE ACCEPTABLE ONLY DURING THE MONTHS OF MAY THROUGH SEPTEMBER INCLUSIVE. SEEDING MAY PROCEED OUTSIDE THE SPECIFIED TIME PERIOD WHENEVER IT IS IN THE INTEREST OF THE CONTRACTOR BUT SHALL BE AUGMENTED WITH MULCHING, NETTING, OR OTHER TREATMENT.
6. NO TEMPORARY OR PERMANENT STOCKPILING OF MATERIALS OR EQUIPMENT SHALL OCCUR WITHIN CRITICAL AREAS OR ASSOCIATED BUFFERS, OR THE CRITICAL ROOT ZONE FOR VEGETATION PROPOSED FOR RETENTION.
7. WATER SITE AS NECESSARY TO CONTROL DUST.
8. TOPSOIL SHALL NOT BE PLACED WHILE SUBGRADE IS IN A FROZEN OR MUDDY CONDITION, WHEN THE SUBGRADE IS EXCESSIVELY WET, OR WHEN CONDITIONS EXIST THAT MAY OTHERWISE BE DETRIMENTAL TO PROPER GRADING OR PROPOSED SODDING OR SEEDING.
9. ON-SITE EROSION CONTROL MEASURES SHALL BE THE RESPONSIBILITY OF THE CONTRACTOR. ANY PROBLEMS OCCURRING BEFORE FINAL STABILIZATION OF THE SITE SHALL BE CORRECTED BY THE CONTRACTOR.
10. IF EROSION OR SEDIMENTATION OCCURS ON ADJACENT SITES, ALL CONSTRUCTION WORK WITHIN THE PROJECT LIMITS THAT WILL AGGRAVATE THE SITUATION MUST CEASE AND THE CONTRACTOR SHALL IMMEDIATELY COMMENCE RESTORATION OR MITIGATION MEASURES. RESTORATION ACTIVITY SHALL CONTINUE UNTIL SUCH TIME AS THE PROBLEM IS RECTIFIED.
11. ALL EROSION AND SEDIMENTATION CONTROL MEASURES SHOWN ON THESE DRAWINGS SHALL BE INSTALLED PRIOR TO, OR AS THE FIRST STAGE OF SITE PREPARATION.
12. SHOULD THE TEMPORARY EROSION AND SEDIMENTATION CONTROL MEASURES SHOWN ON THESE DRAWINGS NOT PROVE ADEQUATE TO CONTROL EROSION AND SEDIMENTATION, THE CONTRACTOR SHALL INSTALL ADDITIONAL FACILITIES AS NECESSARY TO PROTECT ADJACENT SITES, SENSITIVE AREAS, NATURAL WATER COURSES, AND/OR STORM DRAINAGE SYSTEMS.
13. ALL NECESSARY FACILITIES SHALL BE MAINTAINED ON SITE TO PREVENT DEBRIS, DUST, AND MUD FROM ACCUMULATING ON ADJACENT ROADWAYS.
14. THE CONTRACTOR SHALL BE REQUIRED TO CALL 1-800-424-5555 OR "811" A MINIMUM OF TWO WORKING DAYS PRIOR TO COMMENCING ANY EXCAVATION ACTIVITIES TO DETERMINE FIELD LOCATIONS OF ALL UNDERGROUND UTILITIES.
15. RUNOFF SHALL NOT BE ALLOWED TO DRAIN INTO THE STORM DRAINAGE SYSTEM DURING CONSTRUCTION. PROVIDE TEMPORARY PROTECTION FOR YARD DRAINS AS REQUIRED TO PREVENT RUNOFF FROM ENTERING THE STORM DRAINAGE SYSTEM.
16. THE TEMPORARY EROSION AND SEDIMENT CONTROL MEASURES SHALL CONFORM TO THE CONSTRUCTION STORMWATER POLLUTION PREVENTION PLAN AND THE CONSTRUCTION STORMWATER NPDES AND STATE WASTE DISCHARGE GENERAL PERMIT. UPDATES MEASURES AS NECESSARY TO CONFORM TO SITE CONDITIONS.
17. ALL TEMPORARY EROSION AND SEDIMENTATION CONTROL MEASURES SHALL BE COMPLETELY REMOVED PRIOR TO PROJECT COMPLETION.
18. REFER TO THE CONSTRUCTION STORMWATER POLLUTION PREVENTION PLAN FOR ADDITIONAL REQUIREMENTS.

PUBLIC IMPROVEMENTS

XXXXX
PERMIT #

DEVELOPMENT ENGINEER

DATE

PIERCE COUNTY ORDINANCE NUMBER

1. CONTACT XXXX, THE AREA INSPECTOR, AT 253-596- XXXX , TO COORDINATE THE PRE-CONSTRUCTION MEETING AND COUNTY INSPECTIONS. PRE-CONSTRUCTION MEETING SHALL BE REQUESTED AT LEAST 48-HOURS IN ADVANCE OF THE START OF CONSTRUCTION.
2. APPOINT A CERTIFIED EROSION AND SEDIMENT CONTROL LEAD WHO SHALL BE PROVIDED A COPY OF THE SWPPP, EROSION CONTROL PLAN & INSPECTION SCHEDULE.
3. FAILURE TO OBTAIN REQUIRED INSPECTIONS MAY ENDANGER OR DELAY PROJECT APPROVAL.
4. ALL WORK IN THE PUBLIC RIGHT-OF-WAY REQUIRES A GENERAL RIGHT-OF-WAY PERMIT FROM PIERCE COUNTY PLANNING AND PUBLIC WORKS.

LEGEND

- RIGHT-OF-WAY / PROPERTY LINE
- CL — CLEARING / PROJECT LIMITS
- CE — CONSTRUCTION ENTRANCE (3 / C1.0)
- REMOVE EXISTING ASPHALT
- REMOVE EXISTING CONCRETE
- SF — SILT FENCE (2 / C1.0)
- CF — CONSTRUCTION FENCE
- IP — INLET PROTECTION (1 / C1.0)
- SL — SAWCUT LINE
- REMOVE EXISTING TREE
- EXISTING TREE TO REMAIN
- XXX — EXISTING MINOR CONTOURS
- XXX — EXISTING MAJOR CONTOURS

KEYNOTES

1. REMOVE EXISTING ASPHALT PAVEMENT.
2. REMOVE EXISTING CEMENT CONCRETE.
3. PRESERVE/PROTECT EXISTING TREE.
4. PRESERVE/PROTECT EXISTING ASPHALT PAVEMENT.
5. REMOVE EXISTING TREE.
6. REMOVE EXISTING SIGN.
7. REMOVE EXISTING CURB.
8. STORMWATER FACILITY. DO NOT TRACK HEAVY EQUIPMENT.
9. REMOVE PAVEMENT MARKING.

CLEARING LIMITS NOTE

THE CLEARING LIMITS SHOWN MAY NEED TO BE ADJUSTED TO PERFORM THE WORK. CONTRACTOR IS RESPONSIBLE FOR REVIEWING LIMITS AND CONFIRMING SILT FENCE LOCATION PRIOR TO WORK. ANY ADJUSTMENTS SHALL BE AT THE COST OF THE CONTRACTOR.

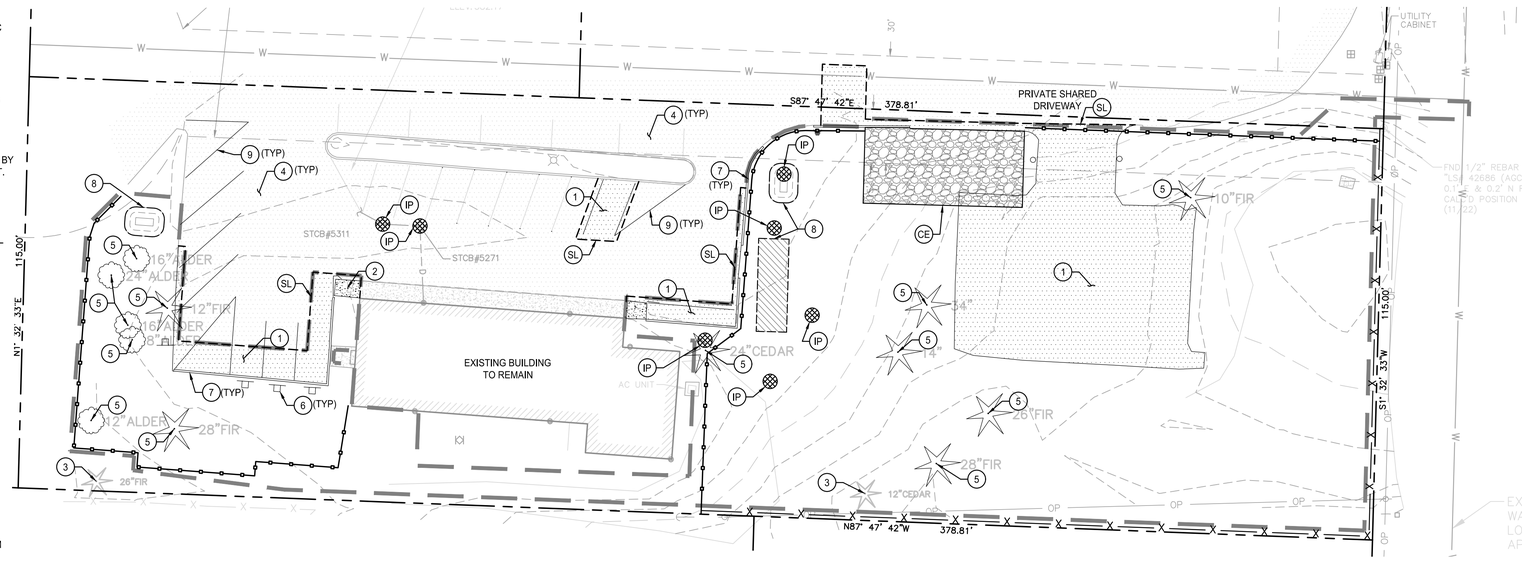

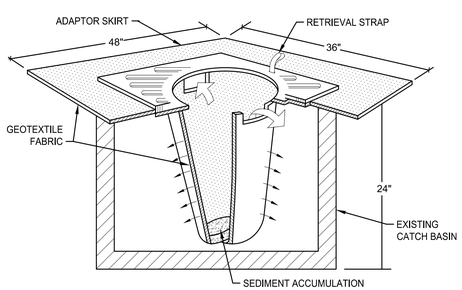

NOTES:
1. FILTERS SHALL BE INSPECTED AFTER EACH STORM EVENT AND CLEANED OR REPLACED WHEN 1/3 FULL.
2. INSTALL INLET PROTECTION IN ALL NEW STORM STRUCTURES THAT WILL COLLECT STORMWATER AS THEY ARE INSTALLED.

1 INLET PROTECTION
NOT TO SCALE

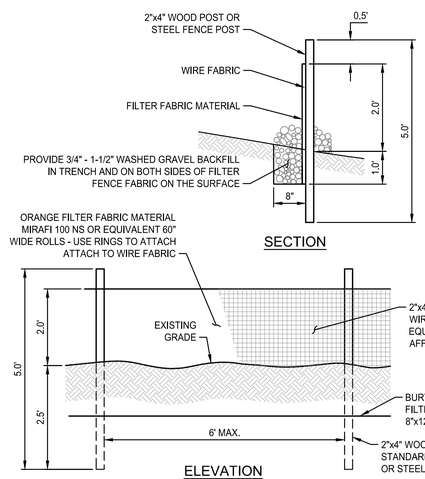

2 SILT FENCE
NOT TO SCALE

NOTES

1. THE FILTER FABRIC SHALL BE PURCHASED IN A CONTINUOUS ROLL CUT TO THE LENGTH OF THE BARRIER TO AVOID USE OF JOINTS. WHEN JOINTS ARE NECESSARY, FILTER CLOTH SHALL BE SPLICED TOGETHER ONLY AT A SUPPORT POST WITH A MINIMUM SIX-INCH OVERLAP, AND BOTH ENDS SECURELY FASTENED TO THE POST.
2. THE FILTER FABRIC FENCE SHALL BE INSTALLED TO FOLLOW THE CONTOURS (WHERE FEASIBLE). THE FENCE POSTS SHALL BE SPACED A MAXIMUM OF SIX FEET APART AND DRIVEN SECURELY INTO THE GROUND (MINIMUM OF 30")
3. A TRENCH SHALL BE EXCAVATED, ROUGHLY EIGHT INCHES WIDE AND TWELVE INCHES DEEP, UPSLOPE AND ADJACENT TO THE WOOD POST TO ALLOW THE FILTER FABRIC TO BE BURIED.
4. WHEN STANDARD STRENGTH FILTER FABRIC IS USED, A WIRE MESH SUPPORT FENCE SHALL BE FASTENED SECURELY TO THE UPSLOPE SIDE OF THE POSTS USING HEAVY-DUTY WIRE STAPLES AT LEAST ONE INCH LONG, TIE WIRES, OR HOG RINGS. THE WIRE SHALL EXTEND INTO THE TRENCH A MINIMUM OF FOUR INCHES AND SHALL NOT EXTEND MORE THAN THIRTY SIX INCHES ABOVE THE ORIGINAL GROUND SURFACE.
5. THE STANDARD STRENGTH FILTER FABRIC SHALL BE STAPLED OR WIRED TO THE FENCE, AND TWENTY INCHES OF THE FABRIC SHALL BE EXTENDED INTO THE TRENCH. THE FABRIC SHALL NOT EXTEND MORE THAN THIRTY SIX INCHES ABOVE THE ORIGINAL GROUND SURFACE. FILTER FABRIC SHALL NOT BE STAPLED TO EXISTING TREES.
6. WHEN EXTRA-STRENGTH FILTER FABRIC AND CLOSER POST SPACING ARE USED, THE WIRE MESH SUPPORT FENCE MAY BE ELIMINATED. IN SUCH A CASE, THE FILTER FABRIC IS STAPLED OR WIRED DIRECTLY TO THE POSTS WITH ALL OTHER PROVISIONS OF STANDARD NOTE (S) APPLYING.
7. THE TRENCH SHALL BE BACKFILL WITH 3/4 INCH MINIMUM DIAMETER WASHED GRAVEL.
8. FILTER FABRIC FENCES SHALL BE REMOVED WHEN THEY HAVE SERVED THEIR USEFUL PURPOSE, BUT NOT BEFORE THE UPSLOPE AREA HAS BEEN PERMANENTLY STABILIZED.
9. FILTER FABRIC FENCES SHALL BE INSPECTED IMMEDIATELY AFTER EACH RAINFALL AND AT LEAST DAILY DURING PROLONGED RAINFALL. ANY REQUIRED REPAIRS SHALL BE MADE IMMEDIATELY.
10. DO NOT INSTALL BELOW AN OUTLET PIPE OR WEIR.
11. DO NOT DRIVE OVER OR FILL OVER FILTER FABRIC FENCE.

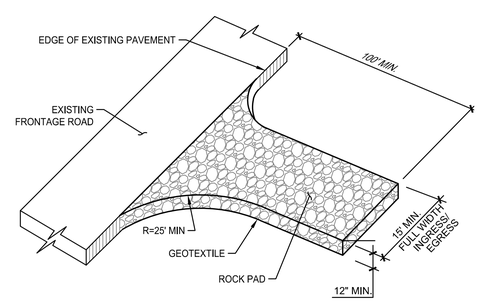

1. ROCK PAD MATERIAL SHALL BE QUARRY SPALLS PER WSDOT STANDARD SPECIFICATION 9-13.6 AND MAY BE TOP-DRESSED WITH 1"-3" ROCK.
2. THE ROCK PAD SHALL BE AT LEAST 12 INCHES THICK AND 100 FEET LONG. WIDTH SHALL BE THE FULL WIDTH OF THE VEHICLE INGRESS AND EGRESS AREA.
3. ADDITIONAL ROCK SHALL BE ADDED PERIODICALLY TO MAINTAIN PROPER FUNCTION OF THE PAD.
4. IF THE PAD DOES NOT ADEQUATELY REMOVE THE MUD FROM THE VEHICLE WHEELS, THE WHEELS SHALL BE HOSED OFF BEFORE THE VEHICLE ENTERS A PAVED STREET. THE WASHING SHALL BE DONE ON AN AREA COVERED WITH CRUSHED ROCK, AND WASH WATER SHALL DRAIN TO A SEDIMENT RETENTION FACILITY OR THROUGH A SILT FENCE.
5. GEOTEXTILE SHALL MEET THE FOLLOWING: GRAB TENSILE STRENGTH 200 PSI MIN, GRAB TENSILE LONGATION 30% MAX, MULLEN BURST STRENGTH 400 PSI MIN, AOS 2-45 (U.S. STANDARD SIEVE).
6. THE ROCK PAD SHALL BE REMOVED UPON COMPLETION OF ALL CONSTRUCTION.

3 CONSTRUCTION ENTRANCE
NOT TO SCALE

N

20 10 0 20 40
SCALE IN FEET

Know what's below. Call before you dig.

CONSEJO COUNSELING
21120 MERIDIAN AVENUE E
GRAHAM, WA 98338

PERMIT SET

ETHOS CIVIL
Engineering Entitlement Project Management
ethoscivil.com info@ethoscivil.com 253.414.1989

TREVOR JAMES MCDONALD STATE OF WASHINGTON 57655 REGISTERED PROFESSIONAL ENGINEER
02.06.2024

© 2022 Ethos Civil LLC. All rights reserved. No part of this document may be reproduced in any form without permission from Ethos Civil LLC.

DESIGNED JTB
CHECKED TJM
DRAWN TJM
CHECKED JTB

#	DATE	DESCRIPTION

22133
02.06.2024

DEMOLITION & TESC PLAN

C1.0

PLOTTED: 06/20/24 12:27:33 PM FILE: 22133-SHA-TESC.DWG LAST SAVED BY: TREVOR

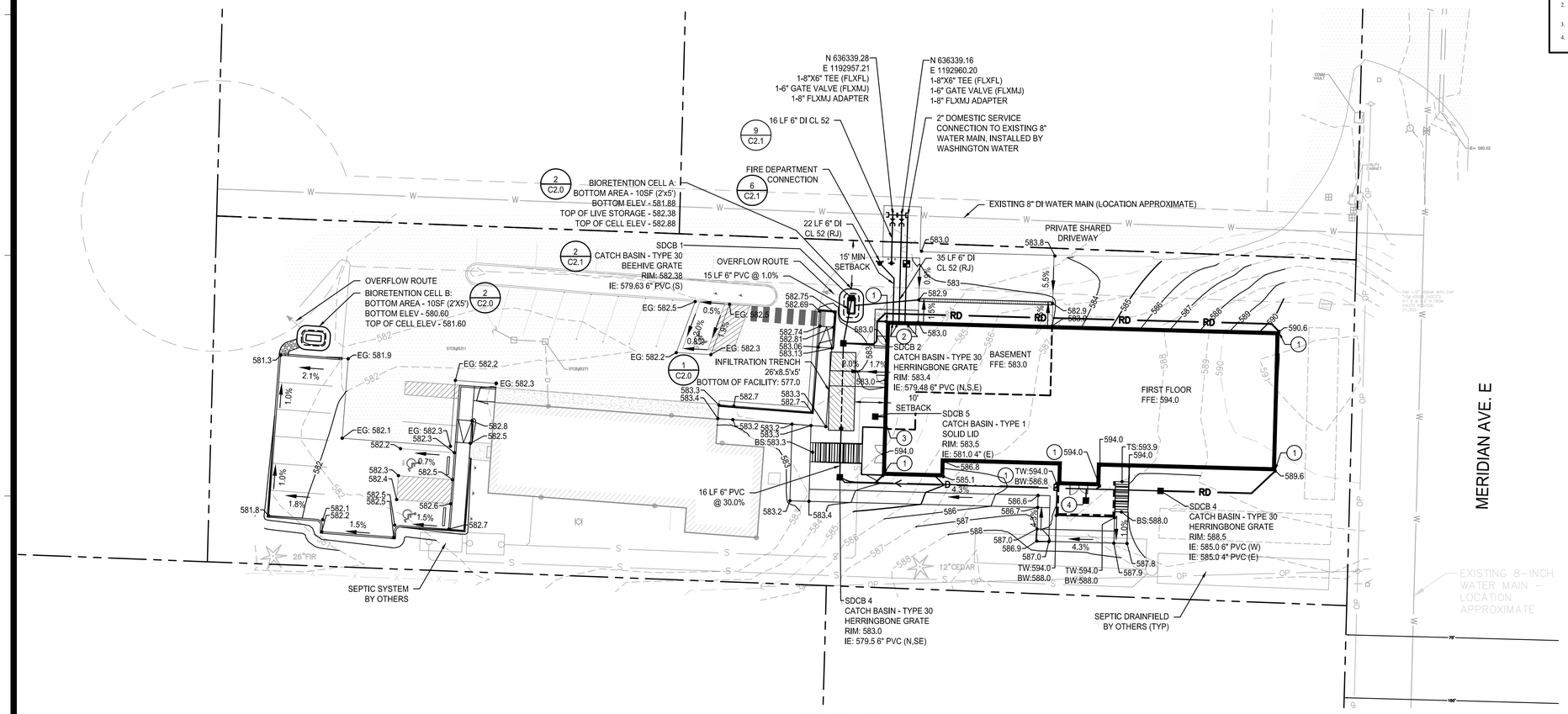

PUBLIC IMPROVEMENTS

XXXXX
PERMIT #

DEVELOPMENT ENGINEER

DATE

PIERCE COUNTY ORDINANCE NUMBER

1. CONTACT XXXX, THE AREA INSPECTOR, AT 253-798- XXXX , TO COORDINATE THE PRE-CONSTRUCTION MEETING AND COUNTY INSPECTIONS. PRE-CONSTRUCTION MEETING SHALL BE REQUESTED AT LEAST 48-HOURS IN ADVANCE OF THE START OF CONSTRUCTION.
2. APPOINT A CERTIFIED EROSION AND SEDIMENT CONTROL LEAD WHO SHALL BE PROVIDED A COPY OF THE SWPPP, EROSION CONTROL PLAN & INSPECTION SCHEDULE.
3. FAILURE TO OBTAIN REQUIRED INSPECTIONS MAY ENDANGER OR DELAY PROJECT APPROVAL.
4. ALL WORK IN THE PUBLIC RIGHT-OF-WAY REQUIRES A GENERAL RIGHT-OF-WAY PERMIT FROM PIERCE COUNTY PLANNING AND PUBLIC WORKS.

LEGEND

- CATCH BASIN TYPE 30 (1 / C2.1)
- STORM DRAINAGE CLEANOUT (7 / C2.1)
- D — STORM DRAINAGE PIPING (5 / C2.1)
- RD — ROOF DRAIN PIPING
- ZURN Z-866 TRENCH DRAIN WITH DUCTILE IRON GRATE (8 / C2.1)
- ENERGY DISSIPATION CHANNEL (3 / C2.1)
- XXX — EXISTING MAJOR CONTOURS
- XXX — EXISTING MINOR CONTOURS
- 123 — PROPOSED MINOR CONTOUR
- 123 — PROPOSED MAJOR CONTOUR
- METER AS NOTED
- FITTINGS AS NOTED
- THRUST BLOCK
- FIRE DEPARTMENT CONNECTION (FDC)
- FIRE HYDRANT ASSEMBLY

KEYNOTES

1. CONNECT DOWNSPOUT TO STORM DRAINAGE NETWORK. REFER TO ARCHITECTURAL DRAWINGS FOR EXACT QUANTITY AND LOCATION OF DOWNSPOUTS.
2. DOMESTIC WATER SERVICE / FIRE SERVICE POINT OF CONNECTION. REFER TO MECHANICAL DRAWINGS FOR CONTINUATION.
3. LULA LIFT SUMP DRAIN LINE. REFER TO MECHANICAL DRAWING FOR CONTINUATION.
4. 9" NDS LOW-PROFILE HOUSING ADAPTER WITH DUCTILE IRON GRATE. PATIO SHALL BE SLOPED TO THE LOW POINT WITH A MAXIMUM SLOPE OF 2.0%.

GRADING NOTES

1. THE EXISTING SITE SOILS REQUIRE PROPER COMPACTION PRIOR TO PLACEMENT OF PAVING AND UTILITY IMPROVEMENTS.
2. CONTRACTOR SHALL ASSURE POSITIVE DRAINAGE AWAY FROM BUILDINGS FOR ALL PAVED AND NON-PAVED AREAS, AND SHALL GRADE ALL AREAS TO PRECLUDE PONDING OF SURFACE WATER.
3. THE SPOT ELEVATIONS INDICATED ON THESE PLANS REPRESENTS THE DESIGN TOP OF PAVEMENT UNLESS NOTED OTHERWISE.
4. VEGETATED AREAS LOCATED ADJACENT TO THE BUILDING SHALL BE 6" MIN BELOW FINISH FLOOR ELEVATION UNLESS NOTED OTHERWISE.
5. ADA ROUTES SHALL NOT EXCEED 5% IN THE DIRECTION OF TRAVEL UNLESS HANDRAILS ARE PROVIDED. LANDINGS AT NO MORE THAN 2% SHALL BE PROVIDED FOR EVERY 2.5 FEET OF RISE. CROSS SLOPE SHALL NOT EXCEED 2%.
6. TYPICAL CURB HEIGHT IS SIX INCHES UNLESS NOTED OTHERWISE.

STORM DRAINAGE NOTES

1. BARE GALVANIZED METAL SHALL NOT BE USED FOR MATERIALS THAT CONVEY STORMWATER, SUCH AS ROOFS, CANOPIES, SIDING, GUTTERS, DOWNSPOUTS, ROOF DRAINS AND PIPES. ANY GALVANIZED MATERIALS SHALL HAVE AN INERT, NON-LEACHALBE FINISH, SUCH AS BAKED ENAMEL, FLUOROCARBON PAINT (SUCH AS KYNAR OR HYLAR), FACTORY-APPLIED EPOXY, PURE ALUMINUM, OR ASPHALT COATING. ACRYLIC PAINT, POLYESTER PAINT, FIELD-APPLIED, AND PART ZINC (SUCH AS GALVALUME) COATINGS ARE NOT ACCEPTABLE.
2. BURIED UTILITIES ARE SHOWN IN THEIR APPROXIMATE LOCATION. PRIOR TO INSTALLATION OF ANY PROJECT IMPROVEMENTS, CONTRACTOR SHALL VERIFY LOCATION AND ELEVATION OF EXISTING UTILITIES. IN THE EVEN T OF ANY DISCREPANCY FROM THE INFORMATION PRESENTED ON THESE PLANS, CONTRACTOR SHALL NOTIFY THE DESIGN ENGINEER.
3. CONSTRUCT ALL UTILITIES IN CONFORMANCE WITH THE STORM AND ROOF DRAIN TRENCH SECTION DETAIL UNLESS NOTED OTHERWISE.
4. REFER TO ARCHITECTURAL DRAWINGS FOR EXACT QUANTITY AND LOCATION OF DOWNSPOUTS.
5. ALL STORM PIPES CONNECTING TO CONCRETE STRUCTURES SHALL BE GROUTED TO ASSURE CONNECTION AT STRUCTURE IS WATERTIGHT.
6. ROOF AND FOOTING DRAIN TIGHT LINES ARE LOCATED ON DRAWINGS FOR CLARITY AND ARE TO BE INSTALLED IN ACCORDANCE WITH APPLICABLE CODES. ALL STORM DRAINAGE AND ROOF DRAIN LINE CLEANOUTS SHALL COMPLY WITH THE CLEANOUT DETAIL.
7. ALL CATCH BASINS ARE TO BE SITUATED SUCH THAT THE OUTSIDE EDGE OF THE FRAME IS AT THE FACE OF CURB OR FLOW LINE OF GUTTER (WHERE APPLICABLE).
8. ALL STORM DRAINAGE PIPE SHALL BE CPEP UNLESS NOTED OTHERWISE.

N

20 10 0 20 40
SCALE IN FEET

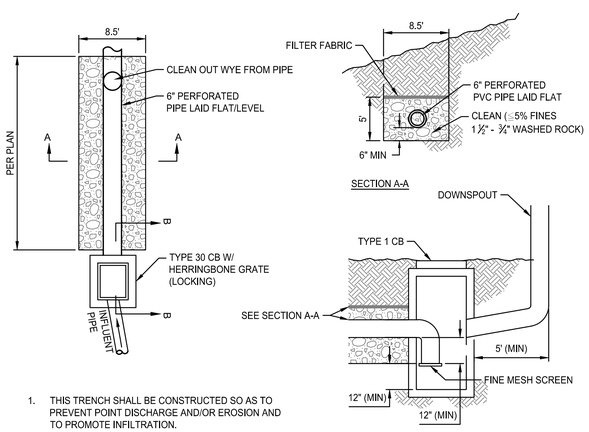

1. THIS TRENCH SHALL BE CONSTRUCTED SO AS TO PREVENT POINT DISCHARGE AND/OR EROSION AND TO PROMOTE INFILTRATION.

1 INFILTRATION TRENCH

NOT TO SCALE

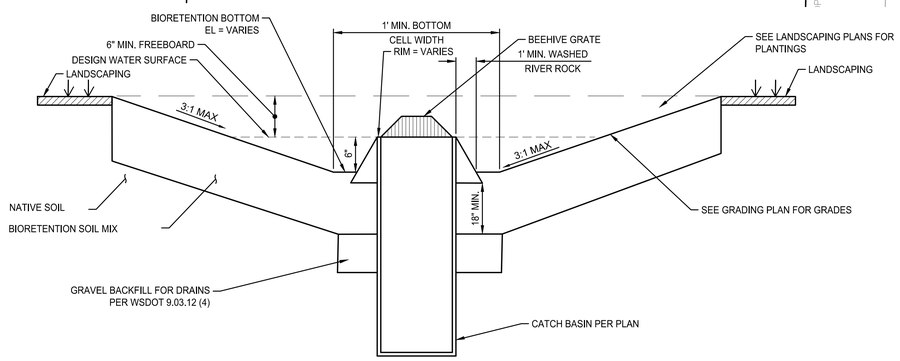

TYPICAL SECTION

NOTES

1. CONTRACTOR SHALL EXCAVATE TO SUBGRADE OF BIORETENTION CELL.
2. SUBGRADE PREPARATION: SCARIFY SUBSOILS IN TWO DIRECTIONS TO A DEPTH OF 6". THE ENTIRE AREA SHOULD BE DISTURBED BY SCARIFICATION AND BSM APPLIED TO SCARIFIED SURFACE.
3. PROVIDE BIORETENTION SOIL MIX (BSM) ACCORDING TO SPECIFICATION.
4. SEE GRADING PLANS FOR ELEVATION AND DIMENSIONS OF BIORETENTION CELL.
5. BIORETENTION SOIL MIX (BSM) SHALL NOT BE PLACED UNTIL AFTER SEDIMENT POND USE HAS ENDED. DIVERT UPSTREAM FLOWS FROM BIORETENTION UNTIL SITE HAS BEEN STABILIZED.
6. DO NOT PLACE BSM WHEN SOIL IS SATURATED OR SUBJECT TO WATER WITHIN 24 HRS. COVER ON SITE SOILS TO PREVENT WETTING OR SATURATION. TEST SOIL FERTILITY AND MICRONUTRIENTS AND, IF NECESSARY, AMEND MIXTURE TO CREATE OPTIMUM CONDITIONS FOR PLANT ESTABLISHMENT AND EARLY GROWTH AT RATES RECOMMENDED BY AN INDEPENDENT LAB SOIL TEST.
7. ABOVE THE MAX. WATER SURFACE A 4" MULCH LAYER SHALL BE INSTALLED. WOOD CHIP MULCH SHALL BE COMPOSED OF SHREDDED OR CHIPPED HARDWOOD OR SOFTWOOD, SHALL BE FREE OF SEEDS, SOIL, ROOTS AND OTHER MATERIAL THAT IS NOT TRUNK OR BRANCH WOOD AND BARK. MULCH SHALL NOT INCLUDE GRASS CLIPPINGS, MINERAL AGGREGATE OR PURE BARK.

2 BIORETENTION CELL

NOT TO SCALE

Know what's **below.**
Call before you dig.

PLOTTED: 2/6/2024 12:27:43 PM FILE: 22133-SHA-GRAD-STRM.DWG LAST SAVED BY: TREVOR

CONSEJO COUNSELING

21120 MERIDIAN AVENUE E
GRAHAM, WA 98338

PERMIT SET

ETHOS CIVIL
Engineering Entitlement Project Management
ethoscivil.com info@ethoscivil.com 253.414.1989

TREVOR JAMES MCDANIEL
STATE OF WASHINGTON
57655
REGISTERED PROFESSIONAL ENGINEER
02.06.2024

© 2022 Ethos Civil LLC. All rights reserved. No part of this document may be reproduced in any form without permission from Ethos Civil LLC.

DESIGNED	JTB
CHECKED	TJM
DRAWN	TJM
CHECKED	JTB

#	DATE	DESCRIPTION

22133
02.06.2024

GRADING & UTILITY PLAN

C2.0

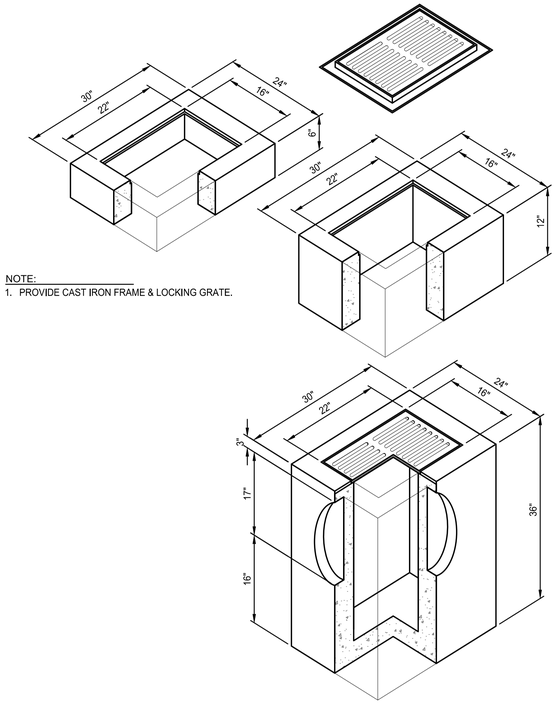

NOTE:
1. PROVIDE CAST IRON FRAME & LOCKING GRATE.

1 AREA DRAIN TYPE 30
NOT TO SCALE

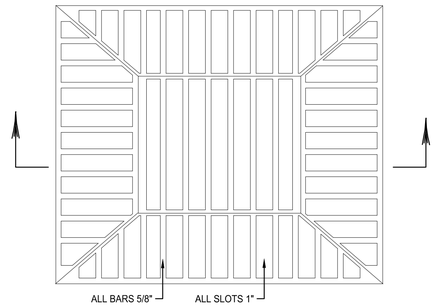

PLAN

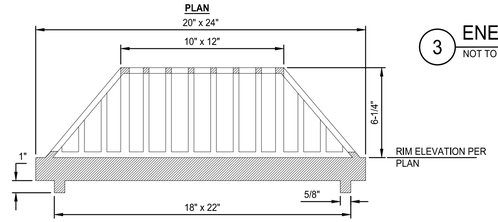

SECTION A-A

NOTES:
1. USE WITH WSDOT STANDARD PLAN B-5.20 FRAME.
2. MATERIAL TO CONFORM TO WSDOT STANDARD SPECIFICATIONS 9-05.15(2).

2 BEEHIVE GRATE
NOT TO SCALE

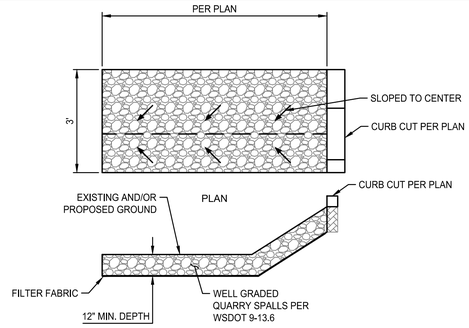

3 ENERGY DISSIPATION CHANNEL
NOT TO SCALE

FIRE PROTECTION NOTES

1. THE FIRE PROTECTION SYSTEM SHOWN ON THESE DRAWINGS, INCLUDING MATERIALS, SIZING, AND CONFIGURATION, IS SUBJECT TO APPROVAL BY A FIRE PROTECTION ENGINEER. THE DRAWINGS CONTAINING FIRE PROTECTION WORK, INCLUDING DETAIL DRAWINGS, SHALL BE STAMPED FOR APPROVAL BY A FIRE PROTECTION ENGINEER AND SUBMITTED TO THE FIRE MARSHAL FOR APPROVAL.
2. CONTRACTOR SHALL COMPLY WITH ALL NATIONAL FIRE PROTECTION ASSOCIATION REQUIREMENTS AS SET FORTH BY "NFPA 13", ITS AMENDMENTS, AND LOCAL REQUIREMENTS, INCLUDING BUT NOT LIMITED TO ACQUISITION OF ALL PERMITS.
3. THE FIRE PROTECTION SYSTEM SHALL BE INSTALLED BY A WASHINGTON STATE CERTIFIED LEVEL "U" CONTRACTOR IN ACCORDANCE WITH WAC 212-80-010.
4. CONTRACTOR'S BID SHALL REFLECT THESE CONDITIONS AND REQUIREMENTS.
5. FIRE SPRINKLER UNDERGROUND SUPPLY AND FDC REQUIRES A SEPARATE PERMIT. CONTRACTOR SHALL APPLY FOR AND OBTAIN PERMIT.

PUBLIC IMPROVEMENTS

XXXXX
PERMIT #

DEVELOPMENT ENGINEER

DATE

PIERCE COUNTY ORDINANCE NUMBER

1. CONTACT XXXX THE AREA INSPECTOR, AT 253-798- XXXX TO COORDINATE THE PRE-CONSTRUCTION MEETING AND COUNTY INSPECTIONS. PRE-CONSTRUCTION MEETING SHALL BE REQUESTED AT LEAST 48-HOURS IN ADVANCE OF THE START OF CONSTRUCTION.
2. APPOINT A CERTIFIED EROSION AND SEDIMENT CONTROL LEAD WHO SHALL BE PROVIDED A COPY OF THE SWPPP, EROSION CONTROL PLAN & INSPECTION SCHEDULE.
3. FAILURE TO OBTAIN REQUIRED INSPECTIONS MAY ENDANGER OR DELAY PROJECT APPROVAL.
4. ALL WORK IN THE PUBLIC RIGHT-OF-WAY REQUIRES A GENERAL RIGHT-OF-WAY PERMIT FROM PIERCE COUNTY PLANNING AND PUBLIC WORKS.

WATER NOTES

1. ALL WORK AND MATERIALS SHALL BE IN ACCORDANCE WITH SOUTHWOOD WATER DISTRICT OF PIERCE COUNTY, "CONDITIONS AND STANDARDS FOR CONSTRUCTING EXTENSION TO THE WATER SYSTEM", THE LATEST REVISIONS OF AWWA STANDARD SPECIFICATIONS FOR ROAD, BRIDGE, AND MUNICIPAL CONSTRUCTION BY WASHINGTON STATE D.O.T. AND WASHINGTON STATE CHAPTER A.P.W.A.
2. THE CONTRACTOR SHALL COMPLY WITH ALL THE REQUIREMENTS OF STATE AND LOCAL HEALTH AUTHORITIES.
3. THE ROAD AND STRUCTURE LOCATIONS SHOWN ARE APPROXIMATE AND INTENDED TO SHOW THE RELATIVE LOCATION OF THE PROPOSED WATER SYSTEM ONLY.
4. ALL LOCATIONS OF EXISTING UTILITIES ARE APPROXIMATE AND IT SHALL BE THE RESPONSIBILITY OF THE CONTRACTOR TO VERIFY THE EXACT LOCATION TO AVOID DAMAGE OR DISTURBANCE.
5. ALL DUCTILE IRON PIPE AND FITTINGS SHALL BE CEMENT LINED.
6. THE MINIMUM COVER FOR WATER MAINS SHALL BE 3' AND SHALL BE MAINTAINED AT ALL POINTS.
7. INSTALLATION OF WATER MAINS AND SERVICE LINES SHALL INCLUDE LOCATOR WIRE BURIED ALONG THE ENTIRE LENGTH OF THE PIPE. LOCATOR WIRE TO BE 14 GAUGE. LOCATOR WIRE TO BE RUN TO 12" ABOVE GROUND AT EACH METER, BLOW OFF, AND AIR/VACUUM VALVE. ALL SPLICES IN THE LOCATOR WIRE SHALL BE MADE USING A 3M DIRECT BURY SPLICE KIT, MODEL DBY. THE KIT SHALL BE INSTALLED PER MANUFACTURER'S SPECIFICATIONS. THE WIRES SHALL BE TIED IN A KNOT 6" TO 8" FROM THE SPLICE.
8. GATE VALVES SHALL BE RESILIENT-SEATED GATE VALVES CONFORMING TO AWWA C-509. ALL EXISTING VALVES SHALL BE PRESSURE TESTED BY THE CONTRACTOR PRIOR TO CONNECTION.
9. CONTRACTOR SHALL COORDINATE AND PROVIDE ALL THE NECESSARY POWER/FIRE SYSTEM MONITORING WIRING.

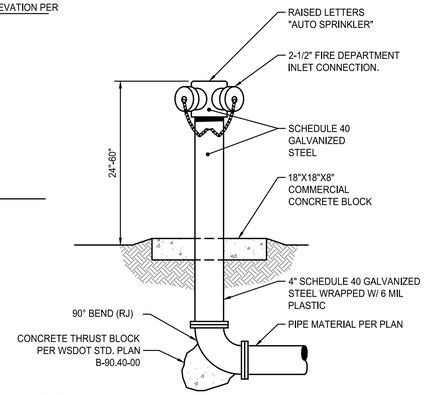

NOTES:
1. FIRE DEPARTMENT CONNECTION SHALL BE PER NFPA 24.
2. COMMERCIAL CONCRETE PER WSDOT STD. SPEC. 6-02.3(2)B.

6 FIRE DEPARTMENT CONNECTION
NOT TO SCALE

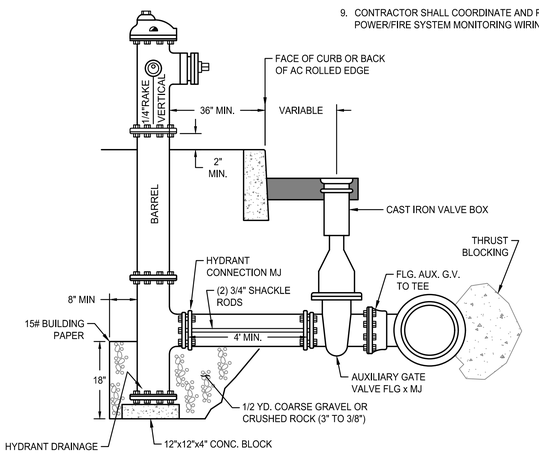

9 FIRE HYDRANT ASSEMBLY
NOT TO SCALE

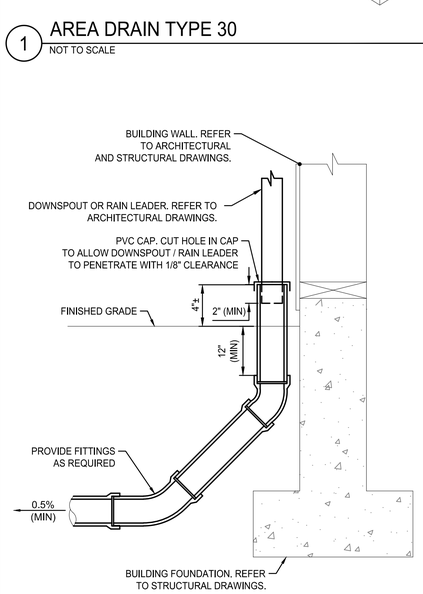

4 ROOF DOWNSPOUT
NOT TO SCALE

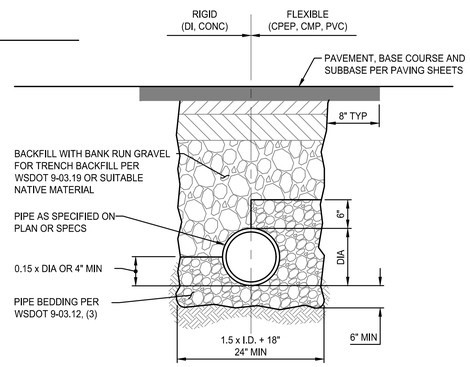

NOTES:
1. BACKFILL MATERIAL SHALL NOT HAVE ROCKS OR PARTICLES LARGER THAN 1" WITHIN 12" OF THE PIPE. BACKFILL MATERIAL SHALL BE PLACED IN 8" MAXIMUM LOOSE LIFTS AND COMPACTED TO 95% MAXIMUM DRY DENSITY PER MODIFIED PROCTOR TEST (ASTM D-1557).
2. CONSTRUCT ALL STORM AND ROOF DRAINS IN CONFORMANCE WITH THIS DETAIL UNLESS NOTED OTHERWISE ON THE PLANS.
3. ALL TRENCH EXCAVATIONS SHALL BE SLOPED, SHORED, SHEETED, BRACED, OR OTHERWISE SUPPORTED IN COMPLIANCE WITH OSHA REGULATIONS AND LOCAL ORDINANCES.
4. IF ORGANIC MATERIAL IS ENCOUNTERED DURING UTILITY EXCAVATION, OVEREXCAVATE TRENCH TO INCREASE PIPE BEDDING DEPTH TO 18" OR MORE AS REQUIRED TO COMPACT BEDDING TO FIRM AND UNYIELDING CONDITION.

5 TRENCH SECTION
NOT TO SCALE

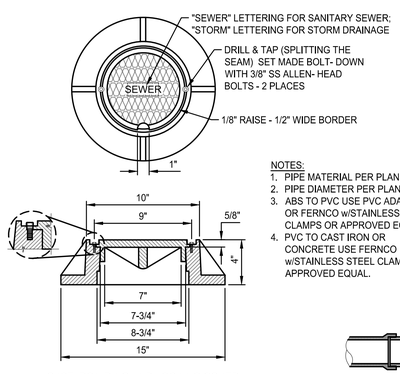

CAST IRON RING AND LOCKING COVER

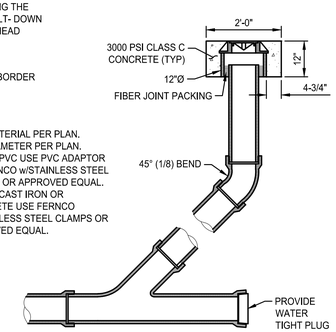

NOTES:
1. PIPE MATERIAL PER PLAN.
2. PIPE DIAMETER PER PLAN.
3. ABS TO PVC USE PVC ADAPTOR OR FERNCO w/STAINLESS STEEL CLAMPS OR APPROVED EQUAL.
4. PVC TO CAST IRON OR CONCRETE USE FERNCO w/STAINLESS STEEL CLAMPS OR APPROVED EQUAL.

7 STORM CLEANOUT
NOT TO SCALE

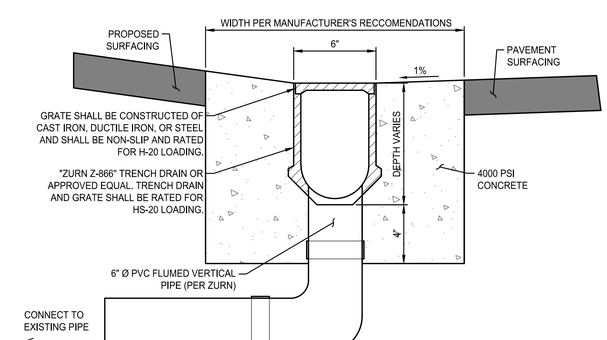

8 TRENCH DRAIN
NOT TO SCALE

Know what's **below.**
Call before you dig.

CONSEJO COUNSELING
21120 MERIDIAN AVENUE E
GRAHAM, WA 98338

PERMIT SET

ETHOS CIVIL
Engineering Entitlement Project Management
ethoscivil.com info@ethoscivil.com 253.414.1989

TREVOR JAMES MCDONALD STATE OF WASHINGTON 57666 REGISTERED PROFESSIONAL ENGINEER 02.06.2024

© 2022 Ethos Civil LLC. All rights reserved. No part of this document may be reproduced in any form without permission from Ethos Civil LLC.

DESIGNED JTB
CHECKED TJM
DRAWN TJM
CHECKED JTB

#	DATE	DESCRIPTION

22133
02.06.2024

GRADING & UTILITY NOTES & DETAILS

C2.1

PLOTTED: 2/6/2024 12:21:47 PM FILE: 22133-SHG-GRADI-STRM-DWG LAST SAVED BY: TREVOR

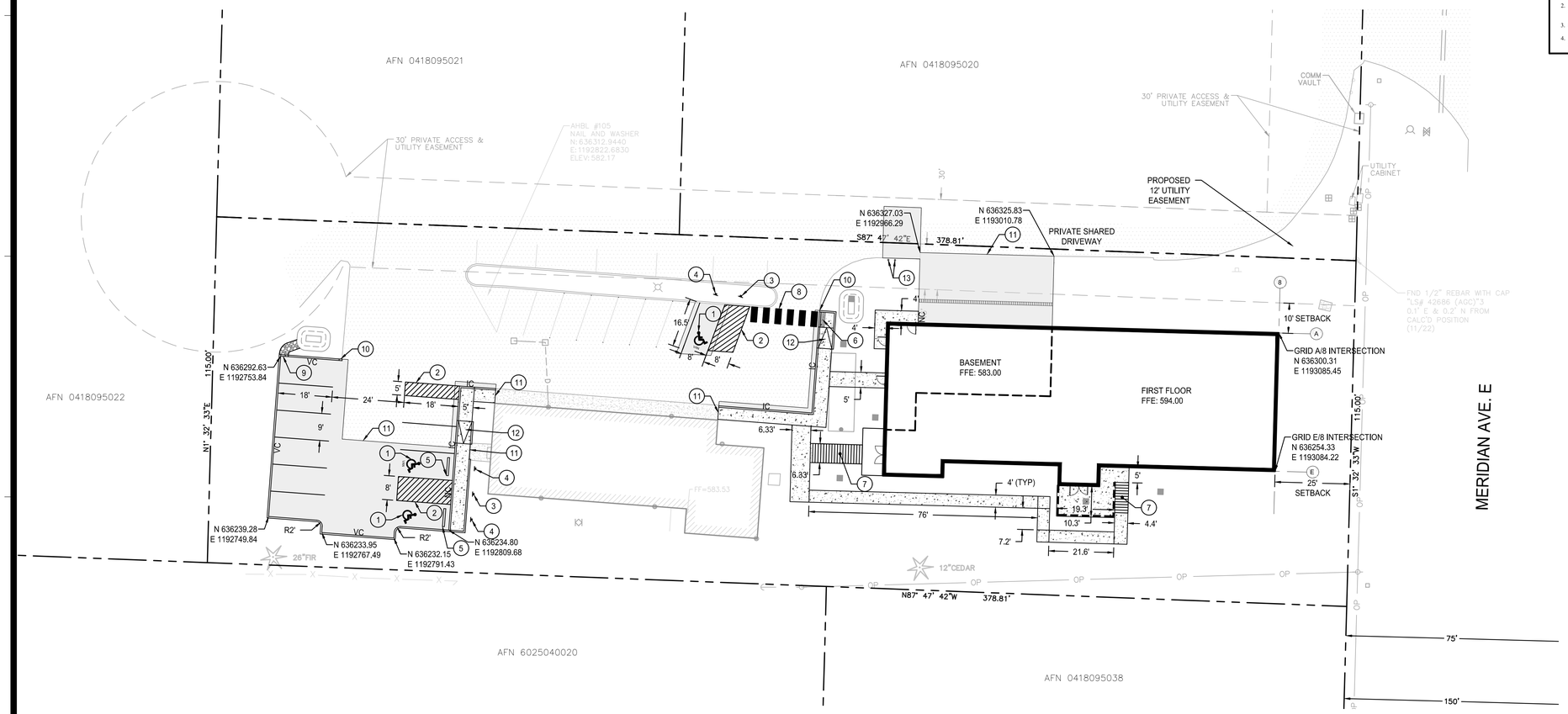

PUBLIC IMPROVEMENTS

XXXXX
PERMIT #

DEVELOPMENT ENGINEER

DATE

PIERCE COUNTY ORDINANCE NUMBER

1. CONTACT XXXX, THE AREA INSPECTOR, AT 253-798- XXXX TO COORDINATE THE PRE-CONSTRUCTION MEETING AND COUNTY INSPECTIONS. PRE-CONSTRUCTION MEETING SHALL BE REQUESTED AT LEAST 48-HOURS IN ADVANCE OF THE START OF CONSTRUCTION.
2. APPOINT A CERTIFIED EROSION AND SEDIMENT CONTROL LEAD WHO SHALL BE PROVIDED A COPY OF THE SWPPP, EROSION CONTROL PLAN & INSPECTION SCHEDULE.
3. FAILURE TO OBTAIN REQUIRED INSPECTIONS MAY ENDANGER OR DELAY PROJECT APPROVAL.
4. ALL WORK IN THE PUBLIC RIGHT-OF-WAY REQUIRES A GENERAL RIGHT-OF-WAY PERMIT FROM PIERCE COUNTY PLANNING AND PUBLIC WORKS.

LEGEND

- RIGHT-OF-WAY/PROPERTY LINE
- ASPHALT PAVEMENT (3 / C3.1)
- CEMENT CONCRETE (4 / C3.1)
- CEMENT CONCRETE WHEEL STOP (1 / C3.1)
- DETECTABLE WARNING SURFACE PER WSDOT STANDARD PLAN F-45.10-02
- ADA SYMBOL PER WSDOT STANDARD PLAN M-24.60-04
- R7-801 SIGN AS NOTED
- CROSSWALK PER WSDOT STANDARD PLAN M-15.10-01
- IC — INTEGRAL CURB AND SIDEWALK (6 / C3.1)
- NC — NO CURB
- VC — VERTICAL CURB (5 / C3.1)

KEYNOTES

1. ADA PARKING SYMBOL PER WSDOT STANDARD PLAN M-24.60-04
2. PAINTED 4" SINGLE WHITE SOLID LINES @ 2' O.C.
3. "NO PARKING - ADA LOADING ZONE" SIGN.
4. ADA ACCESSIBLE PARKING SIGN PER MUTCD R7-801
5. CEMENT CONCRETE WHEELSTOP. (1 / C3.1)
6. DETECTABLE WARNING STRIP PER WSDOT STANDARD PLAN F-45.10-02
7. STAIRS - REFER TO ARCHITECTURAL DRAWINGS.
8. WHITE PAINTED CROSSWALK PER WSDOT STANDARD PLAN M-15.10-01
9. CURB CUT. (2 / C3.1)
10. END CURB WITH 45 DEGREE TAPER.
11. MATCH EXISTING.
12. PARALLEL CURB RAMP PER WSDOT STANDARD PLAN F-40.12-03
13. 6" CONCRETE BOLLARD.

N

20 10 0 20 40
SCALE IN FEET

811
Know what's below. Call before you dig.

CONSEJO COUNSELING

21120 MERIDIAN AVENUE E
GRAHAM, WA 98338

PERMIT SET

ETHOS CIVIL
Engineering Entitlement Project Management
ethoscivil.com info@ethoscivil.com 253.414.1989

TREVOR JAMES MCDANIEL
STATE OF WASHINGTON
57658
REGISTERED PROFESSIONAL ENGINEER
02.06.2024

© 2022 Ethos Civil LLC. All rights reserved. No part of this document may be reproduced in any form without permission from Ethos Civil LLC.

DESIGNED JTB
CHECKED TJM
DRAWN TJM
CHECKED JTB

#	DATE	DESCRIPTION

22133
02.06.2024

HORIZONTAL CONTROL & PAVING PLAN

C3.0

PLOTTED: 2/6/2024 12:27:56 PM FILE: 22133-SHAVE.DWG LAST SAVED BY: TREVOR

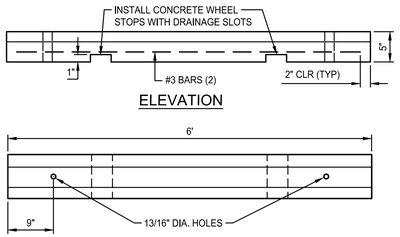

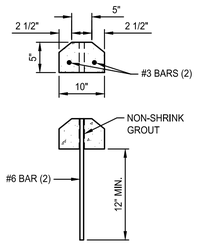

NOTE:
1. THE NON-SHRINK GROUT USED TO ATTACHED THE WHEEL STOP SHALL CONSIST OF 3:1 SAND AND CEMENT. GROUT TO A DEPTH OF 1" FROM THE TOP OF WHEEL STOP.
2. LOCATIONS FOR WEEP HOLES AND V-SLOTS SHALL BE IDENTIFIED ON THE DELIVERY ORDER DRAWINGS.
3. CONCRETE SHALL HAVE A MINIMUM COMPRESSIVE STRENGTH OF 3000 PSI AT 28 DAYS.

1 CONCRETE WHEEL STOP
NOT TO SCALE

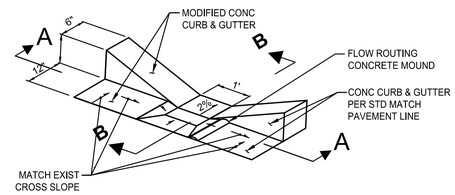

CURB DRAIN CUT OPENING
SCALE: NTS

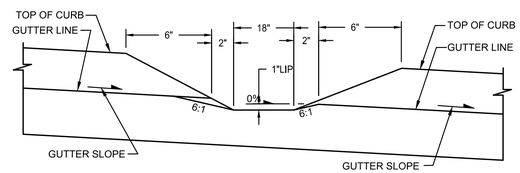

SECTION A-A
SCALE: NTS

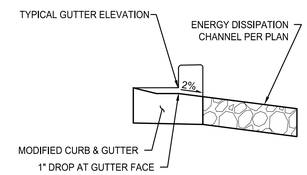

SECTION B-B TYPE 1
SCALE: NTS

2 CURB CUT
NOT TO SCALE

PUBLIC IMPROVEMENTS — XXXXX PERMIT #

DEVELOPMENT ENGINEER — DATE

PIERCE COUNTY ORDINANCE NUMBER

1. CONTACT XXXX, THE AREA INSPECTOR, AT 253-798- XXXX TO COORDINATE THE PRE-CONSTRUCTION MEETING AND COUNTY INSPECTIONS. PRE-CONSTRUCTION MEETING SHALL BE REQUESTED AT LEAST 48-HOURS IN ADVANCE OF THE START OF CONSTRUCTION.
2. APPOINT A CERTIFIED EROSION AND SEDIMENT CONTROL LEAD WHO SHALL BE PROVIDED A COPY OF THE SWPPP, EROSION CONTROL PLAN & INSPECTION SCHEDULE.
3. FAILURE TO OBTAIN REQUIRED INSPECTIONS MAY ENDANGER OR DELAY PROJECT APPROVAL.
4. ALL WORK IN THE PUBLIC RIGHT-OF-WAY REQUIRES A GENERAL RIGHT-OF-WAY PERMIT FROM PIERCE COUNTY PLANNING AND PUBLIC WORKS.

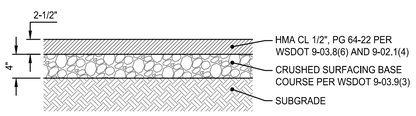

NOTES:
1. DEPTHS INDICATED ARE COMPACTED THICKNESS.
2. HMA SHALL BE COMPACTED TO A TARGET AVERAGE DENSITY OF 92% BASED ON THE RICE THEORETICAL MAXIMUM DENSITY PER ASTM D-2041. INDIVIDUAL LOCATIONS SHALL BE COMPACTED NOT LESS THAN 90% NOR MORE THAN 96%.
3. ALL ASPHALT BASE MATERIAL SHALL BE COMPACTED TO A MINIMUM DENSITY OF 95% BASED ON THE MODIFIED PROCTOR MAXIMUM DRY DENSITY PER ASTM D-1557.
4. SUBGRADE SHALL BE COMPACTED TO A FIRM AND UNYIELDING CONDITION PRIOR TO PLACEMENT OF ANY PAVEMENT LAYERS. ANY LOCALIZED ZONES OF SOFT, ORGANIC-RICH, OR DEBRIS-LADEN SOILS SHOULD BE OVEREXCAVATED AND REPLACED WITH STRUCTURAL FILL MATERIAL.
5. RECYCLED CONCRETE IS NOT ACCEPTABLE.
6. SEAL JOINTS WITH EMULSIFIED ASPHALT PER PROJECT SPECIFICATIONS.

3 ASHPALT PAVEMENT SECTION
NOT TO SCALE

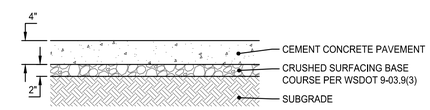

NOTES:
1. DEPTHS INDICATED ARE COMPACTED THICKNESSES.
2. CEMENT CONCRETE PAVEMENT SHALL CONSIST OF PORTLAND CEMENT CONCRETE WITH A MINIMUM COMPRESSIVE STRENGTH OF 3000 PSI AND A MINIMUM RUPTURE MODULUS OF 580 PSI.
3. ALL BASE MATERIAL SHALL BE COMPACTED TO A MINIMUM DENSITY OF 95% BASED ON THE MODIFIED PROCTOR MAXIMUM DRY DENSITY PER ASTM D-1557.
4. SUBGRADE SHALL BE COMPACTED TO A FIRM AND UNYIELDING CONDITION PRIOR TO PLACEMENT OF ANY PAVEMENT LAYERS. ANY LOCALIZED ZONES OF SOFT, ORGANIC-RICH, OR DEBRIS-LADEN SOILS SHOULD BE OVEREXCAVATED AND REPLACED WITH STRUCTURAL FILL MATERIAL.
5. RECYCLED CONCRETE IS NOT ACCEPTABLE.

4 CEMENT CONCRETE SECTION
NOT TO SCALE

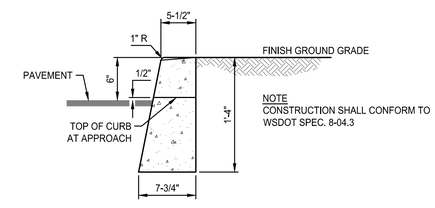

NOTE
CONSTRUCTION SHALL CONFORM TO WSDOT SPEC. 8-04.3

5 VERTICAL CURB
NOT TO SCALE

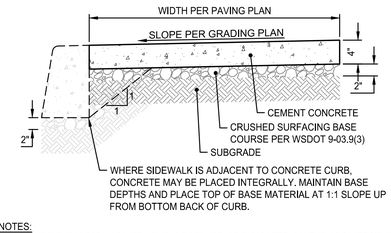

NOTES:
1. PROVIDE EXPANSION JOINTS AT 10' OC MIN. OR AS INDICATED ON THE ARCHITECTURAL OR LANDSCAPE ARCHITECTURE PLANS.
2. DEPTHS INDICATED ARE COMPACTED THICKNESS.
3. CEMENT CONCRETE PAVEMENT SHALL CONSIST OF PORTLAND CEMENT CONCRETE WITH A MINIMUM COMPRESSIVE STRENGTH OF 2500 PSI AND A MINIMUM RUPTURE MODULUS OF 580 PSI. PROVIDE LIGHT BROOM FINISH PERPENDICULAR TO DIRECTION OF TRAVEL.
4. ALL BASE MATERIAL SHALL BE COMPACTED TO A MINIMUM DENSITY OF 95% BASED ON THE MODIFIED PROCTOR MAXIMUM DRY DENSITY PER ASTM D-1557.
5. SUBGRADE SHALL BE COMPACTED TO A FIRM AND UNYIELDING CONDITION PRIOR TO PLACEMENT OF ANY PAVEMENT LAYERS. ANY LOCALIZED ZONES OF SOFT, ORGANIC-RICH, OR DEBRIS-LADEN SOILS SHOULD BE OVEREXCAVATED AND REPLACED WITH STRUCTURAL FILL MATERIAL.
6. RECYCLED CONCRETE IS NOT ACCEPTABLE.

6 INTEGRAL CURB AND SIDEWALK
NOT TO SCALE

Know what's **below.**
Call before you dig.

PLOTTED: 2/6/2024 12:38:02 PM FILE: 22133-SHPAVE.DWG LAST SAVED BY: TREVOR

CONSEJO COUNSELING
21120 MERIDIAN AVENUE E
GRAHAM, WA 98338

PERMIT SET

ETHOS CIVIL
Engineering Entitlement Project Management
ethosciv.com info@ethosciv.com 253.414.1989

TREVOR JAMES MCDONALD — STATE OF WASHINGTON — 57555 — REGISTERED PROFESSIONAL ENGINEER — 02.06.2024

© 2022 Ethos Civil LLC. All rights reserved. No part of this document may be reproduced in any form without permission from Ethos Civil LLC.

DESIGNED JTB
CHECKED TJM
DRAWN TJM
CHECKED JTB

#	DATE	DESCRIPTION

22133
02.06.2024

HORIZONTAL CONTROL & PAVING PLAN NOTES & DETAILS

C3.1