DRAWINGS FOR CONSTRUCTION OF THE

WELL 13 REPLACEMENT

FOR AMERICAN WATER MILITARY SERVICES

JOINT BASE LEWIS-MCCHORD, WASHINGTON

PROJECT NUMBER P4-A60MWA2-00002

PUBLIC WATER SYSTEM ID 26050

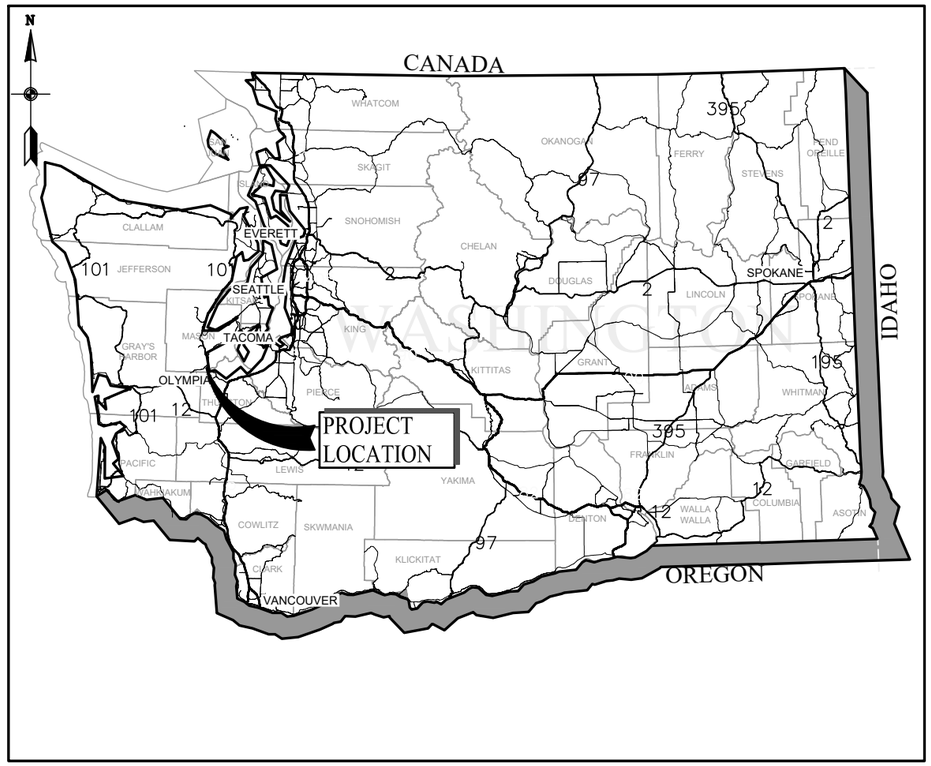

PROJECT LOCATION MAP

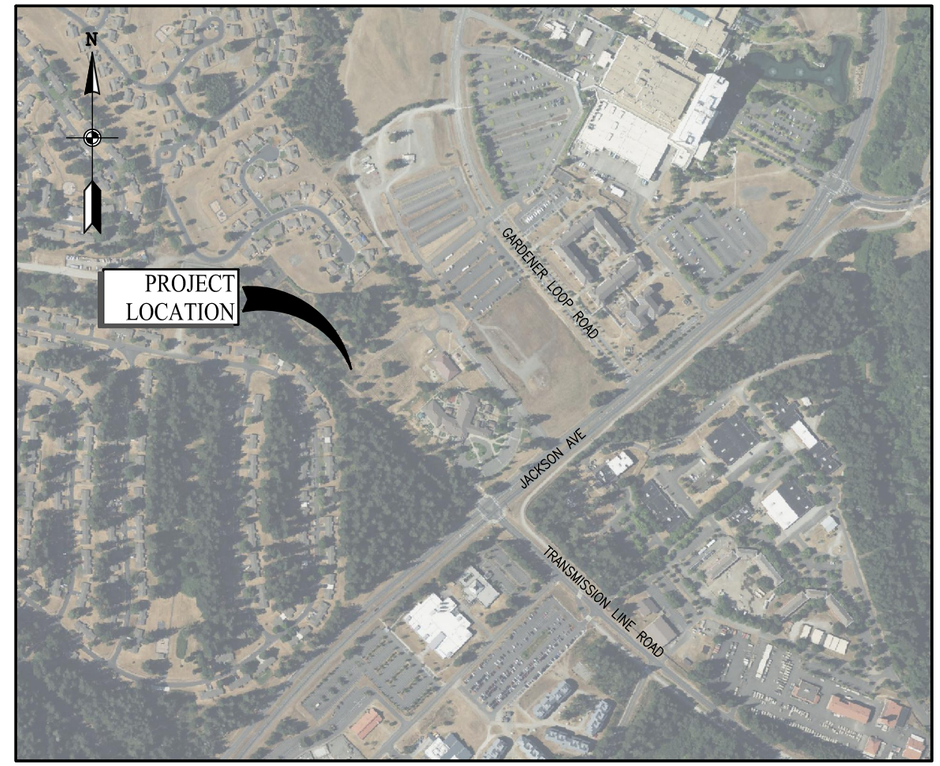

PROJECT VICINITY MAP

AMERICAN WATER
Military Services
Joint Base Lewis-McChord

BOWEN COLLINS & ASSOCIATES

90% REVIEW

NOT FOR CONSTRUCTION
FOR REVIEW ONLY

NO.	DATE	REV. BY	DESCRIPTION

REVISIONS

AMERICAN WATER (P4-A60MWA2-00002)
WELL 13 REPLACEMENT
FOR AMERICAN WATER MILITARY SERVICES

VERIFY SCALE
BAR IS ONE INCH ON ORIGINAL DRAWING

REVIEW
CHECKED R. ROCHA
APPROVED J. OLDHAM

DESIGN
DESIGN R. GARCIA
DRAWN R. GARCIA

GENERAL

PROJECT LOCATIONS AND VICINITY MAPS

PROJECT NUMBER 427-22-02

DATE: MAY 2023

DRAWING NO.
G-01

SHEET 01 OF 60

P:\American Water\427-22-01, 02, 03 JBLM Wells\2.0 Design Phase\2.9 Drawings\sht\Well 13\4272202_G-01.dwg Plotted: 12/26/2023 2:20 PM By: Rodolfo Garcia

INDEX OF DRAWINGS

SHT NO.	DWG NO.	SHEET TITLE
		GENERAL
01	G-01	PROJECT LOCATIONS AND VICINITY MAPS
02	G-02	INDEX OF DRAWINGS
03	G-03	ABBREVIATIONS
04	G-04	SYMBOLS
05	G-05	GENERAL NOTES
		CIVIL
06	C-01	DEMOLITION AND EROSION CONTROL – PLAN
07	C-02	SITE AND GRADING PLAN
08	C-03	SITE UTILITY
09	C-04	NEW 12" WATERLINE AND PUMP TO POND DRAINLINE – PROFILES
10	C-05	DRAINAGE DETAILS
11	C-06	FE6 CHAINLINK SECURITY FENCE DETAILS
12	C-07	FE6 CHAINLINK SECURITY FENCE GATE DETAILS
13	C-08	AMERICAN WATER STANDARD DETAILS
		ARCHITECTURAL
14	A-01	CODE PLAN
15	A-02	FLOOR PLAN
16	A-03	ROOF PLAN AND DETAILS
17	A-04	EXTERIOR ELEVATIONS
18	A-05	BUILDING SECTION AND DETAILS
19	A-06	SCHEDULES AND DETAILS
		STRUCTURAL
20	S-01	WELL 13 STRUCTURAL FLOOR PLAN
21	S-02	WELL 13 STRUCTURAL ROOF PLAN
22	S-03	WELL 13 SECTIONS
23	S-04	WELL 13 STRUCTURAL DETAILS
		MECHANICAL
24	M-01	WELL 13 – PLAN
25	M-02	WELL 13 – SECTION
26	M-03	WELL HEAD – DETAILS
27	M-04	CHLORINE DOSING PROCESS SYSTEM CHEMATIC
28	M-05	FLOURIDE DOSING PROCESS SYSTEM SCHEMATIC
		HVAC
29	H-01	HVAC ABBREVIATIONS, LEGEND AND NOTES
30	H-02	HVAC SCHEDULES
31	H-03	HVAC PLAN
		ELECTRICAL
32	E-01	ELECTRICAL LEGEND AND NOTES
33	E-02	ELECTRICAL SITE PLAN
34	E-03	POWER AND GROUNDING PLAN
35	E-04	CONTROLS PLAN
36	E-05	LIGHTING PLAN
37	E-06	POWER ONE-LINE DIAGRAM
38	E-07	LOAD SUMMARY AND PANEL SCHEDULE
39	E-08	CONTROL ONE-LINE DIAGRAM – 1
40	E-09	CONTROL ONE-LINE DIAGRAM – 2
41	E-10	PUMP MOTOR CONTROL DIAGRAM
		PLUMBING
42	P-01	PLUMBING ABBREVIATIONS , LEGEND, AND NOTES
43	P-02	PLUMBING SCHEDULES
44	P-03	PLUMBING PLAN
		GENERAL CIVIL DETAILS
45	GC-01	GENERAL CIVIL DETAILS –1
		GENERAL STRUCTURAL DETAILS
46	GS-01	GENERAL STRUCTURAL NOTES – 1
47	GS-02	GENERAL STRUCTURAL NOTES – 2
48	GS-03	GENERAL STRUCTURAL DETAILS – 1
49	GS-04	GENERAL STRUCTURAL DETAILS – 2

INDEX OF DRAWINGS

SHT NO.	DWG NO.	SHEET TITLE
50	GS-05	GENERAL STRUCTURAL DETAILS – 3
51	GS-06	GENERAL STRUCTURAL DETAILS – 4
		GENERAL MECHANICAL DETAILS
52	GM-01	PIPE MATERIAL SCHEDULE
53	GM-02	GENERAL MECHANICAL DETAILS – 01
54	GM-03	GENERAL MECHANICAL DETAILS – 02
		GENERAL HVAC DETAILS
55	GH-01	GENERAL HVAC DETAILS
		GENERAL PLUMBING DETAILS
56	GP-01	GENERAL PLUMBING DETAILS
		GENERAL ELECTRICAL DETAILS
57	GE-01	GENERAL ELECTRICAL DETAILS – 1
58	GE-02	GENERAL ELECTRICAL DETAILS – 2
59	GE-03	GENERAL ELECTRICAL DETAILS – 3
60	GE-04	GENERAL ELECTRICAL DETAILS – 4

AMERICAN WATER
Military Services
Joint Base Lewis-McChord

BOWEN COLLINS & ASSOCIATES

90% REVIEW

NOT FOR CONSTRUCTION
FOR REVIEW ONLY

NO.	DATE	REV. BY	DESCRIPTION

REVISIONS

AMERICAN WATER (P4-A60MWA2-00002)
WELL 13 REPLACEMENT
FOR AMERICAN WATER MILITARY SERVICES

VERIFY SCALE
BAR IS ONE INCH ON ORIGINAL DRAWING

REVIEW
CHECKED R. ROCHA
APPROVED J. OLDHAM

DESIGN
DESIGN R. GARCIA
DRAWN R. GARCIA

GENERAL

INDEX OF DRAWINGS

PROJECT NUMBER 427-22-02
DATE: MAY 2023

DRAWING NO.
G-02

SHEET 02 OF 60

P:\American Water\427-22-01, 02, 03 JBLM Wells\2.0 Design Phase\2.9 Drawings\sht\Well 13\427202_G-02.dwg Plotted: 12/26/2023 2:20 PM By: Rodolfo Garcia

@	AT
AASHTO	AMERICAN ASSOCIATION OF STATE HIGHWAY TRANSPORTATION OFFICIALS
AB	ANCHOR BOLT
ABBR	ABBREVIATION
ABS	ACRYLONITRILE–BUTADIENE–STYRENE
AC	ASPHALTIC CONCRETE OR ALTERNATING CURRENT OR ACTIVATED CARBON
ACI	AMERICAN CONCRETE INSTITUTE
ACP	ASPHALTIC CONCRETE PAVEMENT
ADDL	ADDITIONAL
ADJ	ADJACENT OR ADJUSTABLE
AER	AERATION
AFF	ABOVE FINISH FLOOR
AGGR	AGGREGATE
AH	AIR HANDLER
AIR CONT	AIR CONDITIONING
AISC	AMERICAN INSTITUTE OF STEEL CONSTRUCTION
AL	ALUMINUM, ALUM
ALTN	ALTERNATIVE, ALTERNATE
ANOD	ANODIZED
ANSI	AMERICAN NATIONAL STANDARDS INSTITUTE
APPROX	APPROXIMATE
APVD	APPROVED
ARCH	ARCHITECTURAL
ARV	AIR RELEASE VALVE
ASME	AMERICAN SOCIETY OF MECHANICAL ENGINEERS
ASTM	AMERICAN SOCIETY FOR TESTING AND MATERIAL
ASSY	ASSEMBLY
AUTO	AUTOMATIC
AUX	AUXILIARY
AVAR	AIR VACUUM AND AIR RELEASE VALVE
AWS	AMERICAN WELDING SOCIETY
AWWA	AMERICAN WATER WORKS ASSOCIATION
B & S	BELL & SPIGOT
BC	BEGIN CURVE, BOLT CIRCLE
BF	BLIND FLANGE, BUTTERFLY VALVE
BFG	BELOW FINISH GRADE
BFP	BACK FLOW PREVENTER
BFV	BUTTERFLY VALVE
BHD	BULKHEAD
BHP	BRAKE HORSEPOWER
BLDG	BUILDING
BLK	BLACK OR BLOCK
BLKG	BLOCKING
BLT	BOLT
BM	BEAM, BENCH MARK
BO	BLOW–OFF ASSEMBLY, BLOW–OFF
BOT	BOTTOM
BPS	BOOSTER PUMPING STATION
BPV	BACK PRESSURE VALVE
BRK	BRICK
BTU	BRITISH THERMAL UNIT
BTWN	BETWEEN
BUR	BUILT–UP ROOFING
BVC	BEGIN VERTICAL CURVE
BVCE	BEGIN VERTICAL CURVE ELEVATION
BVCS	BEGIN VERTICAL CURVE STATION
BW	BACK WASH, FILTER BACKWASH
C	CENTIGRADE OR CELSIUS
CAB	CABINET
CAP	CAPACITY
CARV	COMBINATION AIR RELEASE VALVE
CB	CATCH BASIN
CC	CENTER TO CENTER
CCP	CONCRETE CYLINDER PIPE
CD	CEILING DIFFUSER CHEMICAL DRAIN AND VENT
CER	CERAMIC
CFH	CUBIC FEET PER HOUR
CFM	CUBIC FEET PER MINUTE
CFR	CODE OF FEDERAL REGULATIONS
CFS	CUBIC FEET PER SECOND
CG	CHLORINE GAS
CGB	CORD GRIP BUSHING
CHBD	CHALKBOARD
CHEM	CHEMICAL
CHG	CHANGE
CHKD PL	CHECKERED PLATE
CI	CAST IRON
CIP	CAST IRON PIPE
CISP	CAST IRON SOIL PIPE
CJ	CONSTRUCTION JOINT
CJP	COMPLETE JOINT PENETRATION
CL	CHLORINATOR, CHAIN LINK, CENTERLINE OR CHLORINE
CLR	CLEAR, CLEARANCE
CLST	CEMENT LINED STEEL PIPE
CLSM	CONTROLLED LOW STRENGTH MATERIAL
CM	CENTIMETER
CML & C	CEMENT MORTAR LINED AND COATED
CMP	CORRUGATED METAL PIPE
CMU	CONCRETE MASONRY UNIT
CO	CLEANOUT
COL	COLUMN
COMM	COMMUNICATION
COMB	COMBINED
CONC	CONCRETE, CONCENTRIC
COND	CONDENSER, CONDENSATE
CONN	CONNECTION
CONST	CONSTRUCTION, CONSTRUCT
CONT	CONTINUED, CONTINUOUS, CONTINUATION
COORD	COORDINATE
COP	COPPER
COTG	CLEAN–OUT TO GRADE
CPLG	COUPLING
CPS	CULINARY PUMP STATION
CPVC	CHLORINATED POLYVINYL CHLORIDE
CS	CAST STEEL OR CAUSTIC SODA
CTRD	CENTERED
CTR	CENTER
CTSK	COUNTERSUNK
CU FT	CUBIC FOOT
CU IN	CUBIC INCH
CU YD	CUBIC YARD
CULV	CULVERT
CV	CHECK VALVE
CW	COLD WATER
CWO	CHAIN WHEEL OPERATOR
CYL	CYLINDER
d	PENNY
DBA	DEFORMED ANCHOR
DBL	DOUBLE
DC	DIRECT CURRENT
DEG	DEGREE
DEMO	DEMOLITION, DEMOLISH
DEQ	DEPARTMENT OF ENVIRONMENTAL QUALITY
DET	DETAIL
DI	DUCTILE IRON, DROP INLET
DIA	DIAMETER
DIAG	DIAGONAL
DIAPH	DIAPHRAGM
DIFF	DIFFUSER
DIM	DIMENSION
DIP	DUCTILE IRON PIPE
DIR	DIRECTION
DISCH	DISCHARGE
DIST	DISTANCE
DIV	DIVISION
D–LOAD	LOADING CONDITION FOR RCP
DMPR	DAMPER
DN	DOWN, DECANT
DOT	DEPARTMENT OF TRANSPORTATION
DP	DAMP PROOFING
DR	DOOR, DRAIN
DS	DRENCH SHOWER & EYE WASH, DOWNSPOUT
DWG	DRAWING
DWL	DOWEL
E(UG)	ELECTRICAL (UNDERGROUND)
E(OH)	ELECTRICAL (OVERHEAD POWER)
E	EAST
EA	EACH
EB	EXPANSION BOLT
EC	END CURVE
ECC	ECCENTRIC
EF	EACH FACE, EXHAUST FAN
EFF	EFFLUENT
EG	EXISTING GRADE
EL	ELEVATION
ELB	ELBOW
ELEV	ELEVATION
ELEC	ELECTRICAL, ELECTRONIC
EMB	EMBEDMENT
EMER	EMERGENCY
ENCL	ENCLOSURE
ENG	ENGINE
ENGR	ENGINEER
EP	EDGE OF PAVEMENT
EPDM	ETHYL PROPYLENE DIENE MONOMER
EPS	EXPANDED POLYSTYRENE
EQ	EQUAL
EQL SP	EQUALLY SPACED
EQUIP	EQUIPMENT
ETC	ETCETERA
EVAP	EVAPORATOR
EVC	END VERTICAL CURVE
EVCE	END VERTICAL CURVE ELEVATION
EVCS	END VERTICAL CURVE STATION
EW	EACH WAY, EYE WASH
EXH	EXHAUST
EXIST	EXISTING
EXP ANR	EXPANSION BOLT, ANCHOR
EXP JT	EXPANSION JOINT
EXT	EXTERIOR, EXTENSION, EXTERNAL
F	FAHRENHEIT, FACE
F TO F	FACE TO FACE
FAB	FABRICATION, FABRICATE, OR FABRICATED
FB	FLAT BAR
FC	FLEXIBLE COUPLING
FCA	FLANGE COUPLING ADAPTER
FCO	FLOOR CLEANOUT
FD	FLOOR DRAIN
FDN	FOUNDATION
FDR	FEEDER
FEXT	FIRE EXTINGUISHER
FF	FLAT FACE, FAR FACE, FINISH FLOOR
FG	FINISH GRADE, FLOW GLASS
FH	FIRE HYDRANT
FLR	FLOOR
FL	FLOW LINE
FLEX	FLEXIBLE
FLG	FLANGE
FM	FORCE MAIN (SANITARY SEWER)
FND	FOUND
FNSH	FINISH
FO	FIBER OPTIC
FRP	FIBERGLASS REINFORCED PLASTIC
FW	FINISH WATER
FWR	FINISH WATER RESERVOIR
G	GAS
GA	GAGE, GAUGE
GAL	GALLON
GALV	GALVANIZED
GEN	GENERATOR
GFI	GROUND FAULT INTERRUPTER
GI	GALVANIZED IRON
GIS	GEOGRAPHIC INFORMATION SYSTEM
GL	GLASS
GLAZ	GLAZING
GLV	GLOBE VALVE
GND	GROUND
GPD	GALLONS PER DAY
GPH	GALLONS PER HOUR
GPM	GALLONS PER MINUTE
GR	GRADE
GR BRK	GRADE BREAK, GRADE CHANGE
GRTG	GRATING
GRV	GROOVED
GSP	GALVANIZED STEEL PIPE
GV	GATE VALVE
GYP	GYPSUM BOARD
H	HEIGHT
HAS	HEADED ANCHOR STUD
HB	HOSE BIBB
HD	HUB DRAIN
HDPE	HIGH DENSITY POLYETHYLENE
HDR	HEADER
HDW	HARDWARE
HEX	HEXAGONAL
HGR	HANGER
HM	HOLLOW METAL
HORIZ	HORIZONTAL
HP	HORSEPOWER, HIGH PRESSURE,HEAT PUMP, HIGH POINT
HR	HEATING RETURN, HOUR, HOSE RACK
HS	HIGH STRENGTH
HSS	HOLLOW STRUCTURAL SECTION
HTG	HEATING
HTR	HEATER
HV	HOSE VALVE
HVAC	HEATING, VENTILATING AND AIR CONDITIONING
HWL	HIGH WATER LEVEL
HWO	HANDWHEEL OPERATED
HYD	HYDRANT, HYDRAULIC
ICFM	INLET CUBIC FEET PER MINUTE
ID	INSIDE DIAMETER
IE	INVERT ELEVATION
IF	INSIDE FACE
IN	INCH
IN LB	INCH–POUND
INFL	INFLUENT
INSUL	INSULATING
INVT	INVERT
IOB	INLET OUTLET BYPASS
IPS	IRON PIPE SIZE
IRR	IRRIGATION
JA	JORDAN AQUEDUCT
JT	JOINT
JTS	JOINTS
JVWTP	JORDAN VALLEY WATER TREATMENT PLANT
K	KELVIN, KILO OR THOUSAND POUNDS
KG	KILOGRAM
KV	KILOVOLT
KW	KILOWATT
KWH	KILOWATT HOUR
L	LEFT OR LITER
LAB	LABORATORY
LAV	LAVATORY
LB	POUND
LC	LENGTH OF CURVE
LF	LINEAR FEET
LG	LENGTH OR LONG
LH	LEFT HAND
LIP	LIP OF GUTTER
LL	LIVE LOAD
LLV	LONG LEG VERTICAL
LOL	LENGTH OF LINE
LP	LOW POINT
LR	LONG RADIUS
LT	LIGHT, LEFT
LVL	LEVEL
LWL	LOW WATER LEVEL
LWR	LOWER
M	METER, MALE (PIPE THREAD)
MACH	MACHINE
MAN	MAGNETIC, MANUAL
MATL	MATERIAL
MAX	MAXIMUM
MB	MACHINE BOLT
MCC	MOTOR CONTROL CENTER
MECH	MECHANICAL, MECHANISM
MEMB	MEMBRANE
MET	METAL
MFR	MANUFACTURER
MG	MILLION GALLONS
MGD	MILLION GALLONS PER DAY
MH	MANHOLE, MONORAIL HOIST
MI	MALLEABLE IRON
MID	MIDDLE
MIL	1/1,000 INCH
MIN	MINIMUM OR MINUTE
MISC	MISCELLANEOUS
MJ	MECHANICAL JOINT
MO	MASONRY OPENING
MPH	MILES PER HOUR
MTG	MOUNTING
MTL	METAL OR MATERIAL
MTR	MOTOR
MWS	MAXIMUM WATER SURFACE
N	NORTH
NAVD	NORTH AMERICAN VERTICAL DATUM
NBS	NATIONAL BUREAU OF STANDARDS
NC	NORMALLY CLOSED
NE	NORTHEAST
NEC	NATIONAL ELECTRIC CODE
NEMA	NATIONAL ELECTRICAL MANUFACTURES ASSOCIATION
NF	NEAR FACE
NFPA	NATIONAL FIRE PROTECTION ASSOCIATION
NIC	NOT IN CONTRACT
NO	NUMBER OR NORMALLY OPEN
NOM	NOMINAL
NPT	NATIONAL PIPE THREAD
NS	NEAR SIDE
NSF	NATIONAL SANITATION FOUNDATION
NTS	NOT TO SCALE
NW	NORTHWEST
O TO O	OUT TO OUT
OC	ON CENTER, OVER–CROSSING
OD	OUTSIDE DIAMETER, OVERALL DIMENSION
OF	OUTSIDE FACE, OVERFLOW
OFS	OVERFLOW STRUCTURE
OH	OVERHEAD
OPER	OPERATOR, OPERATING
OPNG	OPENING
OPP	OPPOSITE
ORIG	ORIGINAL
OVHD	OVERHEAD
OZ	OUNCE
PC	PORTLAND CEMENT, POINT OF CURVE OR PRIMARY CLARIFIER
PCC	PORTLAND CEMENT CONCRETE
PCF	POUNDS PER CUBIC FOOT
PE	PLAIN END, POLYELECTROLYTE POLYMER, POLYETHYLENE
PG	PRESSURE GAUGE
pH	HYDROGEN ION CONCENTRATION
PI	PLANT INFLUENT, POINT OF INTERSECTION
PJF	PREMOLDED JOINT FILLER
PL	PLATE, PROPERTY LINE, PLACE
PLYWD	PLYWOOD
PM	PUMP, PROPELLER METER
POB	POINT OF BEGINNING
PP	POTASSIUM PERMANGANATE
PPD	POUNDS PER DAY
PPH	POUNDS PER HOUR
PPM	PARTS PER MILLION
PR	PAIR
PRC	POINT OF REVERSE CURVE
PREFAB	PREFABRICATED
PRI	PRIMARY
PRV	PRESSURE REGULATING/REDUCING VALVE
PS	PRESSURE SWITCH, PUMP STATION
PSF	POUNDS PER SQUARE FOOT
PSI	POUNDS PER SQUARE INCH
PSIG	POUNDS PER SQUARE INCH GAUGE
PT	POINT OF TANGENT, PRESSURE TREATED
PTDF	PRESSURE TREATED DOUGLAS FIR
PV	PAVEMENT
PVC	POLYVINYL CHLORIDE
PVI	POINT OF VERTICAL INTERSECTION
PW	POTABLE WATER
RAD	RADIUS
RC	REINFORCED CONCRETE
RCP	REINFORCED CONCRETE PIPE
RD	ROOF DRAIN OR ROAD
RDCR	REDUCER, REDUCING
RECIRC	RECIRCULATION
RED	REDUCING
REF	REFERENCE, REFER
REG	REGULATING, REGISTER
REINF	REINFORCE, REINFORCED
REQD	REQUIRED
REV	REVISION
RF	ROOF, RAISED FACE
RND	ROUND
RPM	REVOLUTIONS PER MINUTE
RP	RADIUS POINT
RS	RAW SEWAGE
RST	REINFORCING STEEL, RESET
RT	REGULATING TANK, RADIOGRAPHIC, RIGHT
RV	ROOF VENT
R/W	RIGHT OF WAY
RW	RAW WATER
S	SOUTH, SECOND
SA	SAMPLE, SAMPLE LINE
SCFM	STANDARD CUBIC FEET PER MINUTE
SCH	SCHEDULE
SD	STORM DRAIN
SECT	SECTION
SHT	SHEET
SIM	SIMILAR
SLP	SLOPE
SP	SPACING, STATIC PRESSURE
SPA	SPACED
SPEC	SPECIFIED, SPECIFICATION
SPECS	SPECIFICATIONS
SPG	SPACING
SPKR	SPEAKER
SPLY	SUPPLY
SPRT	SUPPORT
SQ	SQUARE
SQ FT	SQUARE FOOT
SR	SUPPLY REGISTER
SS	SANITARY SEWER, SERVICE
SST	STAINLESS STEEL
STA	STATION
STD	STANDARD
STIFF	STIFFENER
STL	STEEL
STRL	STRUCTURAL
SUC	STRUCTURAL UNDERDRAIN COLLECTOR
SWA	SOUTHWEST AQUEDUCT
SYM	SYMBOL
SYMM	SYMMETRICAL
SYS	SYSTEM
T	THICKNESS, TOP, TOILET
T&B	TOP AND BOTTOM
T&G	TONGUE AND GROOVE
TAN	TANGENT
TBC	TOP BACK OF CURB
TBM	TEMPORARY BENCH MARK
TDH	TOTAL DYNAMIC HEAD
TECH	TECHNICAL
TEL	TELEPHONE
TEMP	TEMPERATURE, TEMPORARY
THK	THICK
THR'D	THREADED
TK	TANK
TO	TOP OF
TOC	TOP OF CONCRETE
TOG	TOP OF GRADE
TP	TELEPHONE POLE, TURNING POINT
TW	TOP OF WALL
TYP	TYPICAL
UBC	UNIFORM BUILDING CODE
UD	UNDERDRAIN
UG	UNDERGROUND
UH	UNIT HEATER
UL	UNDERWRITERS LABORATORIES
UNO	UNLESS NOTED OTHERWISE
USBR	U.S. BUREAU OF RECLAMATION
V	VALVE, VENT, VOLT, VACUUM
VAR	VARIES, OR VARIABLE
VC	VERTICAL CURVE
VCP	VITRIFIED CLAY PIPE
VERT	VERTICAL
VIC	VICTAULIC COUPLING
VOL	VOLUME
VPI	VERTICAL POINT OF INFLECTION
VSS	VOLATILE SUSPENDED SOLIDS
VTC	VENT THROUGH CEILING
VTR	VENT THROUGH ROOF
W	WEST, WASTE, WIDE FLANGE (BEAM)
W/	WITH
W/O	WITHOUT
WC	WATER COLUMN OR WATER CLOSET
WCO	WALL CLEANOUT
WD	WOOD
WH	WATER HEATER
WS	WATER STOP, WATER SURFACE
WSP	WELDED STEEL PIPE
WSTP	WATER STOP
WT	WEIGHT
WWM	WELDED WIRE MESH
XMFR	TRANSFORMER
XMTR	TRANSMITTER
XS	EXTRA STRONG
YD	YARD
YP	YARD PIPING
YR	YEAR

AMERICAN WATER
Military Services
Joint Base Lewis-McChord

BOWEN COLLINS & ASSOCIATES

90% REVIEW

NOT FOR CONSTRUCTION
FOR REVIEW ONLY

REVISIONS

NO.	DATE	REV. BY	DESCRIPTION

VERIFY SCALE
BAR IS ONE INCH ON ORIGINAL DRAWING

AMERICAN WATER (P4-A60MWA2-00002)
WELL 13 REPLACEMENT
FOR AMERICAN WATER MILITARY SERVICES

REVIEW
CHECKED R. ROCHA
APPROVED J. OLDHAM

DESIGN
DESIGN R. GARCIA
DRAWN R. GARCIA

GENERAL
ABBREVIATIONS

PROJECT NUMBER 427-22-02
DATE: MAY 2023

DRAWING NO.
G-03

SHEET 03 OF 60

P:\American Water\427-22-01, 02, 03 JBLM Wells\2.0 Design Phase\2.9 Drawings\sht\Well 13\4272202_G-03.dwg Plotted: 12/26/2023 2:21 PM By: Rodolfo Garcia

SECTION IDENTIFICATION

(1) SECTION CUT SHOWN ON DRAWING AS:

SECTION LETTER — A

DRAWING NUMBER WHERE THE SECTION IS SHOWN (SEE NOTE A) — C-10

(2) THIS SECTION IS IDENTIFIED AS:

SECTION A — SECTION LETTER

SCALE: AS DESIGNATED

M-01,C-01... — DRAWING NUMBER WHERE THE SECTION CUT IS SHOWN (SEE NOTE A)

DETAIL IDENTIFICATION

(1) DETAIL IDENTIFICATION SHOWN ON DRAWING AS:

DETAIL NUMBER — 3

DRAWING NUMBER WHERE THE DETAIL IS SHOWN — C-10

THE DETAIL NAME IS OPTIONAL AND LOCATED HERE, FOLLOWING DETAIL CALLOUT

(2) THIS DETAIL IS IDENTIFIED AS:

DETAIL 1 — DETAIL NUMBER

SCALE: AS DESIGNATED

M-01,C-01... — DRAWING NUMBER WHERE THE DETAIL IS SHOWN (SEE NOTE A)

TYPICAL DETAIL IDENTIFICATION

TYPICAL DETAIL C 2000

NTS

TYPICAL DETAIL NUMBER, SEE INDEX OF DRAWINGS FOR LOCATION OF GENERAL DRAWINGS

DRAWING IDENTIFICATION SYSTEM

LETTER	DISCIPLINE
G	GENERAL
C	CIVIL
CP	CORROSION PROTECTION
L	LANDSCAPE
A	ARCHITECTURAL
S	STRUCTURAL
M	MECHANICAL
E	ELECTRICAL
I	INSTRUMENTATION
GC	GENERAL CIVIL DETAILS
GA	GENERAL ARCHITECTURAL DETAILS
GS	GENERAL STRUCTURAL DETAILS
GM	GENERAL MECHANICAL DETAILS
GE	GENERAL ELECTRICAL DETAILS
GI	GENERAL INSTRUMENTATION DETAILS

S-02
- INDIVIDUAL DRAWING NUMBER
- DISCIPLINE

NOTES:

A. IF PLAN AND SECTION (OR DETAIL CALL-OUT AND DETAIL) ARE SHOWN ON SAME DRAWING, DRAWING NUMBER IS REPLACED BY A HORIZONTAL LINE.

B. ELECTRICAL SYMBOLS SHOWN ON ELECTRICAL DRAWINGS. FOR WELDING SYMBOLS USE AMERICAN WELDING SOCIETY STANDARD SYMBOLS. SEE AMERICAN INSTITUTE OF STEEL CONSTRUCTION MANUAL.

- COORDINATE IDENTIFICATION
- ELEVATION INDICATOR
- SECTION CORNER
- BENCH MARK
- MONUMENT INDICATOR
- POTHOLE
- TEST HOLE
- BORING HOLE
- SECTION LINE
- PROPERTY LINE
- EASEMENT
- PARCEL
- R/W — RIGHT-OF-WAY
- NEW ASPHALT
- EXISTING ASPHALT
- CENTERLINE
- 4500 — CONTOUR LINE, FINISHED GRADE
- 4500 — CONTOUR LINE, EXISTING GRADE
- 4500.20 — FINISHED ELEVATION
- (4500.20) — EXISTING ELEVATION
- TOP / TOE — CUT OR FILL SLOPE TO BE CONSTRUCTED
- SILT FENCE
- X — FENCE
- RAILING
- DITCH
- CULVERT
- RIPRAP
- TREE LINE/VEGETATION
- EXISTING STRUCTURE OR FACILITY
- NEW STRUCTURE OR FACILITY
- FUTURE STRUCTURE OR FACILITY
- NEW PIPELINE (CIVIL SHEETS)
- NEW PIPELINE 10" DIA AND SMALLER (CIVIL SHEETS)
- EXISTING UTILITY PIPELINE
- ATMS — ATMS
- CTV — CABLE
- C(ug) — COMMUNICATION BURIED
- COMM — COMMUNICATION OVERHEAD
- P(ug) — ELECTRICAL BURIED
- OHP — ELECTRICAL OVERHEAD
- FO — FIBER OPTICS OVERHEAD
- FO(ug) — FIBER OPTICS UNDERGROUND
- G — GAS
- IRR — IRRIGATION
- PETRO — PETROLEUM LINE
- SS — SANITARY SEWER
- SD — STORM DRAIN
- T(ug) — TELEPHONE BURIED
- TEL — TELEPHONE OVERHEAD
- W — WATERLINE
- TV — CABLE BOX
- CATCH BASIN
- EB — ELECTRICAL BOX
- HYDRANT
- G — GAS MANHOLE
- S — SEWER MANHOLE
- D — STORM DRAIN MANHOLE
- TELEPHONE MANHOLE
- W — WATER MANHOLE
- WM — WATER METER

- POWER POLE
- TB — TELEPHONE BOX
- LIGHT POLE ONE LUMINAIRE
- LIGHT POLE TWO LUMINAIRS
- LIGHT POLE
- STREET LIGHT WITH BRACKET
- TO BE REMOVED OR ABANDONED
- MASONRY
- STEEL
- INSULATION
- GRAVEL
- CONCRETE
- EARTH
- SAND
- ALUMINUM OR METAL DECKING
- CHECKERED PLATE
- SPAN — GRATING
- PLASTIC, RUBBER OR NEOPRENE
- WOOD (ROUGH FRAMING) OR, OPENING OR DEPRESSION IN SLAB OR WALL
- FHC — FIRE HOSE CABINET
- FE — FIRE EXTINGUISHER
- UNIT HEATER
- PCOTG — PRESSURE CLEANOUT TO GRADE
- WCO — WALL CLEANOUT
- FCO — FLOOR CLEANOUT
- COTG — CLEANOUT TO GRADE
- BLOW OFF ASSEMBLY
- HUB DRAIN
- FLOOR DRAIN
- FLOOR SINK
- DRAIN TRAP
- CHANGE IN PIPING MATERIAL
- 24" RCP-RW — PIPE SIZE AND TYPE/FLUID ABBREVIATION (USE FOR EXISTING PIPE CALLOUT)
- 10" PW (2) — PIPE CALLOUT (SEE PIPING SCHEDULE)
- ME-2 — EQUIPMENT NUMBER (SEE EQUIPMENT SCHEDULE)
- STOP GATE
- SLIDE GATE
- SLUICE GATE
- GATE VALVE
- HOSE BIBB (H/B)
- REDUCER OR INCREASER
- LIQUID SURFACE EL

- 1 — REVISION WORK
- 3 — REFERENCE TO NOTE
- 1 — COLUMN LINE GRID
- A — WINDOW TYPE
- 05 — DOOR NUMBER
- 05 — ROOM NUMBER

GENERAL NOTES:

AMERICAN WATER
Military Services
Joint Base Lewis-McChord

BOWEN COLLINS & ASSOCIATES

90% REVIEW

NOT FOR CONSTRUCTION
FOR REVIEW ONLY

NO.	DATE	REV. BY	DESCRIPTION

REVISIONS

AMERICAN WATER (P4-A60MWA2-00002)
WELL 13 REPLACEMENT
FOR AMERICAN WATER MILITARY SERVICES

VERIFY SCALE
BAR IS ONE INCH ON ORIGINAL DRAWING

REVIEW
CHECKED R. ROCHA
APPROVED J. OLDHAM

DESIGN
DESIGN R. GARCIA
DRAWN R. GARCIA

GENERAL
SYMBOLS

PROJECT NUMBER 427-22-02
DATE: MAY 2023

DRAWING NO.
G-04

SHEET 04 OF 60

P:\American Water\427-22-01, 02, 03 JBLM Wells\2.0 Design Phase\2.9 Drawings\shit\Well 13\4272202_G-04.dwg Plotted: 12/26/2023 2:21 PM By: Rodolfo Garcia

GENERAL NOTES

1. SYMBOLS FOR STRUCTURES, PIPE ETC. USED FOR IDENTIFICATION ARE SHOWN IN LEGENDS AND SHALL BE FOLLOWED THROUGHOUT THE PLANS WHENEVER APPLICABLE. NOT ALL OF THE VARIOUS COMPONENTS SHOWN IN THESE LEGENDS ARE NECESSARILY USED IN THE PROJECT.

2. SCALE OF THE DRAWINGS OR DETAILS ARE SHOWN IN TITLE BLOCK OR DIRECTLY UNDER THE PLAN OR DETAIL. THE SIZE OF THE ORIGINAL PLOTTED DRAWINGS IS 22"X34". CARE SHOULD BE TAKEN TO VERIFY THE SCALE BAR TO DETERMINE THE SCALE OF REDUCED REPRODUCTIONS.

3. IT SHALL BE THE CONTRACTORS RESPONSIBILITY TO PERFORM CONSTRUCTION ACTIVITIES PER THE CONTRACT DOCUMENTS. ANY ADDITIONS, DELETIONS, OR MODIFICATIONS SHALL FIRST MEET WITH THE WRITTEN APPROVAL OF THE CONTRACT OFFICER.

4. CONTRACTOR SHALL OBTAIN ALL NECESSARY PERMIT(S) AND COMPLY WITH ALL REQUIREMENTS OF GOVERNING AGENCIES. SEE AMERICAN WATER SPECIFICATIONS FOR ADDITIONAL CONTRACTOR REQUIREMENTS.

5. ALL CONSTRUCTION ACTIVITIES SHALL BE PERFORMED IN A WORKMANLIKE AND SAFE MANNER AND IN ACCORDANCE WITH ALL STATE AND LOCAL CODES AND JOB–SITE RELATED CONSTRUCTION CONDITIONS AND REQUIREMENTS. OBTAIN PERMITS, INSPECTIONS AND APPROVALS AS REQUIRED BY JURISDICTIONAL AGENCIES AND PAY ALL ASSOCIATED FEES. CONTRACTOR AND INSTALLERS SHALL BE LICENSED AS REQUIRED BY STATE AND LOCAL JURISDICTIONS, AND BONDED AS DETERMINED BY PROJECT REQUIREMENTS.

6. CONTRACTOR SHALL PROVIDE NAMES AND OTHER REQUIRED INFORMATION FOR INDIVIDUALS WORKING ON THE PROJECT SITE TO CONTRACT OFFICER FOR AN ENTRY AUTHORIZATION LIST (EAL).

7. CONTRACTOR SHALL BE RESPONSIBLE FOR MAINTAINING CONTROL OF DRAINAGE AND EROSION DURING CONSTRUCTION AT CONSTRUCTION SITE, STAGING, AND SPOILS AREA. CONTRACTOR SHALL SUBMIT STORM RUNOFF CONTROL PLAN FOR APPROVAL AND OBTAIN A STORM WATER POLLUTION PREVENTION PLAN (SWPPP) PERMIT PER JBLM AND STATE REQUIREMENTS PRIOR TO STARTING CONSTRUCTION. CONTRACTOR SHALL PROVIDE INLET PROTECTION FOR STORM DRAIN INLETS NEAR CONSTRUCTION AREAS.

8. CONTRACTOR SHALL OBTAIN A BASE EXCAVATION PERMIT PRIOR TO STARTING EXCAVATION WORK TO FIELD LOCATE EXISTING UTILITIES. LOCATIONS OF ALL EXISTING UTILITIES INCLUDING SERVICE LINES HAVE NOT BEEN IDENTIFIED AND ARE NOT NECESSARILY SHOWN ON THE DRAWINGS. THE CONTRACTOR SHALL BE RESPONSIBLE FOR VERIFYING THE LOCATION OF AND PRESERVING ALL EXISTING UTILITIES.

9. CONTRACTOR SHALL VERIFY DEPTHS OF UTILITIES IN THE FIELD BY POT HOLING A MINIMUM OF 300 FEET AHEAD OF CONSTRUCTION TO AVOID CONFLICTS WITH DESIGNED GRADE AND ALIGNMENT.

10. THE CONTRACTOR SHALL TAKE ALL PRECAUTIONARY MEASURES NECESSARY TO PROTECT EXISTING IMPROVEMENTS FROM DAMAGE WHICH ARE TO REMAIN IN PLACE. ALL SUCH IMPROVEMENTS OR STRUCTURES DAMAGED BY THE CONTRACTORS OPERATIONS SHALL BE REPAIRED OR RECONSTRUCTED TO ORIGINAL OR BETTER CONDITION TO THE SATISFACTION OF THE OWNER AT THE EXPENSE OF THE CONTRACTOR.

11. CONTRACTOR IS SOLELY RESPONSIBLE FOR CONFORMANCE WITH LOCAL AND FEDERAL CODES GOVERNING SHORING AND BRACING OF EXCAVATIONS AND TRENCHES. CONTRACTOR IS RESPONSIBLE FOR THE SAFETY OF THE PUBLIC AND PROTECTION OF PERSONNEL AND WORKERS.

12. CONTRACTOR SHALL NOT DESTROY, REMOVE, OR DISTURB ANY EXISTING SURVEY MONUMENTS WITHOUT AUTHORIZATION OF CONTROLLING AGENCY. NO PAVEMENT CUTTING OR REMOVAL SHALL BEGIN UNTIL ALL SURVEY MARKERS OR MONUMENT POINTS THAT HAVE THE POTENTIAL OF BEING DISTURBED BY THE CONSTRUCTION OPERATIONS HAVE BEEN PROPERLY REFERENCED BY A REGISTERED LAND SURVEYOR. ALL SURVEY MONUMENTS OR POINTS DISTURBED BY THE CONTRACTOR SHALL BE ACCURATELY RESET BY A REGISTERED LAND SURVEYOR AFTER ALL RESTORATION AND RESURFACING HAS BEEN COMPLETED.

13. CONTRACTOR SHALL PREVENT ANY GROUND WATER OR DEBRIS FROM ENTERING NEW PIPES DURING CONSTRUCTION.

14. CONTRACTOR SHALL BE RESPONSIBLE FOR CORRECTING ANY SETTLEMENT OF EXCAVATIONS, AND ANY DAMAGE OF UTILITIES RESULTING FROM SETTLEMENT.

15. INSTALL ALL MATERIALS ACCORDING TO MANUFACTURER RECOMMENDATIONS AND STATE AND LOCAL REQUIREMENTS. USE ONLY NEW AND UNUSED MATERIALS. ALL MATERIALS SHALL BE PROVIDED BY MANUFACTURERS REGULARLY ENGAGED IN PRODUCING SAID ITEMS, AND WHICH SHALL BE FIRST QUALITY, HEAVY DUTY, COMMERCIAL/INDUSTRIAL GRADE, SUITABLE FOR THE INTENDED USE.

16. MINIMUM DEPTH OF NEW PIPE: 4.0 FEET TO TOP OF PIPE UNLESS OTHERWISE NOTED.

17. CONTRACTOR SHALL MAINTAIN A 10–FOOT HORIZONTAL SEPARATION BETWEEN ALL WATER AND SEWER LINES. WHERE WATERLINES CROSS SEWER LINES, MAINTAIN AN 20–INCH VERTICAL SEPARATION FROM ALL SEWER LINES. WATERLINES SHALL BE ROUTED ABOVE SEWER LINES.

18. WARNING TAPE SHALL BE PROVIDED ON ALL UTILITY LINES. PROVIDE TRACER WIRE ON WATER LINES.

19. ALL PIPE, FITTINGS, VALVES, AND CHEMICAL STORAGE TANKS USED FOR POTABLE WATER TREATMENT SHALL BE NSF 61 COMPLIANT FOR DRINKING WATER USE.

20. COORDINATE CONNECTION OF EXISTING WATER MAINS WITH OWNER.

21. WORKING PRESSURE FOR ALL WATERLINES IS 150 PSI WITH A TEST PRESSURE OF 200 PSI. ALL FLANGES, VALVES, FITTINGS, THRUST BLOCKS, ETC., SHALL BE RATED ACCORDINGLY. LEAK TESTING PER AW 33 01 10.13.

22. IN THE CASE OF PIPELINES THAT FAIL TO PASS THE LEAKAGE TEST, THE CONTRACTOR SHALL DETERMINE THE CAUSE OF THE LEAKAGE, SHALL TAKE CORRECTIVE MEASURES NECESSARY TO REPAIR THE LEAKS, AND SHALL AGAIN TEST THE PIPELINES, ALL AT NO ADDITIONAL COST TO THE OWNER.

23. CONTRACTOR SHALL PERFORM CHLORINATION TEST, LEAK TEST, PRESSURE TEST, AND BACTERIA TEST. ALL WATERLINES INSTALLED SHALL BE TESTED AND DISINFECTED IN ACCORDANCE WITH THE AMERICAN WATER WORKS ASSOCIATION STANDARDS AWWA C600 AND AWWA C651. ALL CHLORINATED WATER SHALL BE DISPOSED OF IN ACCORDANCE WITH JBLM AND STATE RULES AND REQUIREMENTS FOR SURFACE DISCHARGE AND COORDINATED WITH OWNER.

24. CONTRACTOR SHALL REMOVE AND STOCKPILE TOPSOIL FROM DISTURBED AREAS OF THE PROJECT. WHEN EXCAVATION AND BACKFILL ARE COMPLETE, THE TOPSOIL SHALL BE REPLACED OVER THE DISTURBED AREAS TO FACILITATE REVEGETATION.

25. CONTRACTOR SHALL PROVIDE ALL IMPORT FILL AND PIPE BEDDING MATERIALS AS REQUIRED. BORROW AREA WILL NOT BE AVAILABLE ON BASE.

26. WATER FOR CONSTRUCTION WILL BE AVAILABLE TO CONTRACTOR. COORDINATE WATER REQUIREMENTS WITH OWNER.

27. ALL WORK SHALL BE IN ACCORDANCE WITH AMERICAN WATER ENTERPRISES STANDARDS, AND APPLICABLE JBLM STANDARDS.

28. SURFACE RESTORATION:
ALL AREAS DISTURBED DURING CONSTRUCTION OUTSIDE OF ROADWAY SHALL BE RESEEDED WITH NATIVE SEED MIX APPROVED BY HILL AFB. SEEDING SHALL BE EITHER DRILLED OR HYDROSEEDED WITH HYDRO MULCH AND TACKIFIER. SEEDING SHALL OCCUR EITHER BETWEEN SEPTEMBER 15TH AND NOVEMBER 30TH, OR MARCH 15TH AND MAY 15TH, UNLESS OTHERWISE APPROVED BY OWNER.

29. WHERE CONTRACTOR ENCOUNTERS EXISTING ASPHALT ON TOP OF CONCRETE PAVEMENT, CONTRACTOR SHALL SAW CUT BOTH PAVEMENTS AND RESTORE SURFACE WITH CONCRETE AND ASPHALT PAVEMENT TO MATCH EXISTING.

30. ALL BURIED REBAR, FITTINGS, COUPLINGS, VALVES AND MECHANICAL JOINT NUTS AND BOLTS ARE TO BE COATED WITH NON OXIDE GREASE CHEVRON FM 2 OR APPROVED EQUAL, COVERED WITH 8 MIL POLYETHYLENE SHEETING, AND TAPE WRAPPED.

31. UNLESS NOTED OTHERWISE, ALL WATER MAIN SHALL BE 12–INCH PVC C900 CLASS 235 DR18 PIPE. SIZE OF FITTINGS SHOWN ON THE PLANS SHALL CORRESPOND TO ADJACENT STRAIGHT RUN OF PIPE, AND SHALL BE DUCTILE IRON FITTINGS.

32. CONTRACTOR SHALL PROTECT ADJACENT PRESSURE PIPELINES AND PROVIDE TEMPORARY THRUST RESTRAINT AS NECESSARY DURING CONSTRUCTION INCLUDING EXISTING VALVES, TEES, BENDS, ETC.. ALL NEW PRESSURE PIPE AND FITTINGS SHALL HAVE THRUST RESTRAINED JOINTS, THRUST BLOCKS, THRUST TIES OR OTHER APPROVED THRUST RESTRAINT. THRUST PROTECTION SHALL BE ADEQUATE FOR THE TEST PRESSURE SPECIFIED.

33. ALL FITTINGS REQUIRED FOR THE COMPLETION OF THE WORK ARE NOT SHOWN IN THE DRAWINGS. MAXIMUM PIPE JOINT DEFLECTION SHALL BE 2–DEGREES. ADDITIONAL FITTINGS REQUIRED TO MAINTAIN THE ALIGNMENT SHOWN IN THE PLANS SHALL BE PROVIDED BY THE CONTRACTOR AT NO ADDITIONAL COST TO THE OWNER.

34. COORDINATE CONNECTION OF EXISTING WATER MAINS WITH OWNER.
   - OWNER DOES NOT GUARANTEE WATER SHUT–DOWNS. CONTRACTOR TO DEVISE PLANS TO AVOID WORK STOPPAGES IN THE EVENT A SHUT–DOWN DOES NOT GO AS PLANNED
   - CONTRACTOR SHALL SUBMIT FOR REVIEW A SEQUENTIAL PLAN FOR CONNECTION, TESTING, AND FLUSHING OF ALL NEW WATER MAINS, HYDRANTS, AND SERVICE CONNECTIONS.

35. ABANDONING EXISTING WATERLINE:
REMOVE ABANDONED PIPE WHERE UNCOVERED OR DISTURBED BY CONSTRUCTION. WHERE NOT DISTURBED, CONTRACTOR MAY ABANDON EXISTING WATER MAIN IN PLACE AFTER NEW MAIN IS IN FULL SERVICE UNLESS NOTED OTHERWISE. PLUG ENDS OF ABANDONED MAIN WITH CONCRETE. OLD WATER MAINS THAT ARE NO LONGER IN SERVICE ARE TO BE DISCONNECTED COMPLETELY FROM THE WORKING SYSTEM. UNLESS CONTRACTOR IS SPECIFICALLY DIRECTED TO REMOVE EXISTING VALVES, THE CONTRACTOR SHALL ABANDON EXISTING VALVES IN PLACE. OPEN VALVE, REMOVE BOTH THE TOP AND BOTTOM OF VALVE BOX AND FILL RESULTING HOLE WITH SAND. RESTORE SURFACE IN ACCORDANCE WITH SURFACE RESTORATION REQUIREMENTS OF THE GOVERNING AGENCY.

36. ALL ASBESTOS CEMENT WATERLINES REQUIRING REMOVAL SHALL BE DISPOSED OF IN ACCORDANCE WITH ALL FEDERAL, STATE, AND LOCAL REQUIREMENTS IN AN APPROVED LOCATION EQUIPPED TO HANDLE SUCH MATERIALS. ANY CUTTING REQUIRED SHALL BE PERFORMED IN ACCORDANCE WITH PROPER REGULATORY PROCEDURES. IN NO CASE SHALL THE PIPE AND FITTINGS BE BROKEN OR CRUSHED.

37. HYDROSEEDING:
   - 37.1. HYDROSEEDING SHALL BE APPLIED TO ALL AREAS DISTURBED BY CONSTRUCTION ACTIVITIES UNLESS OTHERWISE NOTED.
   - 37.2. SEED BEDS PLANTED BETWEEN MAY 1 AND OCTOBER 31 WILL REQUIRE IRRIGATION AND OTHER MAINTENANCE AS NECESSARY TO FOSTER AND PROTECT THE ROOT STRUCTURE.
   - 37.3. FOR SEED BEDS PLANTED BETWEEN OCTOBER 31 AND APRIL 30, ARMORING OF THE SEED WILL BE NECESSARY (E.G., GEOTEXTILES, JUTE MAT, CLEAR PLASTIC COVERING.)
   - 37.4. BEFORE SEEDING, INSTALL NEEDED SURFACE RUNOFF CONTROL MEASURES SUCH AS GRADIENT TERRACES, INTERCEPTOR DIKES, SWALES, LEVEL SPREADERS, AND SEDIMENT BANKS.
   - 37.5. THE SEEDBED SHALL BE FIRM WITH A FAIRLY FINE SURFACE, FOLLOWING SURFACE ROUGHENING. PERFORM ALL OPERATIONS ACROSS OR AT RIGHT ANGLES TO THE SLOPE.
   - 37.6. FERTILIZERS ARE TO BE USED ACCORDING TO SUPPLIERS RECOMMENDATIONS. AMOUNTS USED SHOULD BE MINIMIZED, ESPECIALLY ADJACENT TO WATER BODIES AND WETLANDS.
   - 37.7. SEE SPECIFICATIONS FOR HYDROSEED MIXTURES, FERTILIZER, MULCH, AND APPLICATION RATES.
   - 37.8. PROVIDE TOPSOIL FOR ALL DISTURBED AREAS MEETING THE SPECIFICATIONS.

38. MULCHING:
   - 38.1. MULCH MATERIALS USED SHALL BE HAY OR STRAW, AND SHALL BE APPLIED AT THE RATE OF 2 TONS/ACRE.
   - 38.2. MULCHES SHALL BE APPLIED IN ALL AREAS WITH EXPOSED SLOPES GREATER THAN 2:1.
   - 38.3. MULCHING SHALL BE USED IMMEDIATELY AFTER SEEDING OR IN AREAS WHICH CANNOT BE SEEDED BECAUSE OF THE SEASON.
   - 38.4. ALL AREAS NEEDING MULCH SHALL BE COVERED BY NOVEMBER 1.

COATING SCHEDULE

LOCATION	DESCRIPTION	BURIED/EXPOSED/ SUBMERGED	SIZE	COATING	SPECIFICATION	NOTES
SITE	DUCTILE IRON PIPE	BURIED	ALL	ASPHALT COATING AND POLYETHYLENE ENCASE	AW 33 11 00.15	CEMENT LINED AND ASPHALT SEALED
SITE	DUCTILE IRON PIPE	EXPOSED (INTERIOR)	ALL	SYSTEM 4	09 90 00	CEMENT LINED AND BARE PIPE WITH PRIMER

NOTES:
1. COATING FOR VALVES, COUPLINGS, EQUIPMENT AND FITTINGS SHALL MATCH ADJACENT PIPE.
2. COATING SCHEDULE IS FOR GENERAL INFORMATION AND IS NOT INTENDED TO BE COMPREHENSIVE. SEE SPECIFICATIONS FOR ADDITIONAL DETAILS AND REQUIREMENTS.

AMERICAN WATER
Military Services
Joint Base Lewis-McChord

BOWEN COLLINS & ASSOCIATES

90% REVIEW

NOT FOR CONSTRUCTION
FOR REVIEW ONLY

NO.	DATE	REV. BY	DESCRIPTION

REVISIONS

AMERICAN WATER (P4-A60MWA2-00002)
WELL 13 REPLACEMENT
FOR AMERICAN WATER MILITARY SERVICES

VERIFY SCALE
BAR IS ONE INCH ON ORIGINAL DRAWING

REVIEW
CHECKED R. ROCHA
APPROVED J. OLDHAM

DESIGN
DESIGN J. OLDHAM
DRAWN R. GARCIA

GENERAL
GENERAL NOTES

DATE: MAY 2023
PROJECT NUMBER 427-22-02

DRAWING NO.
G-05

SHEET 05 OF 60

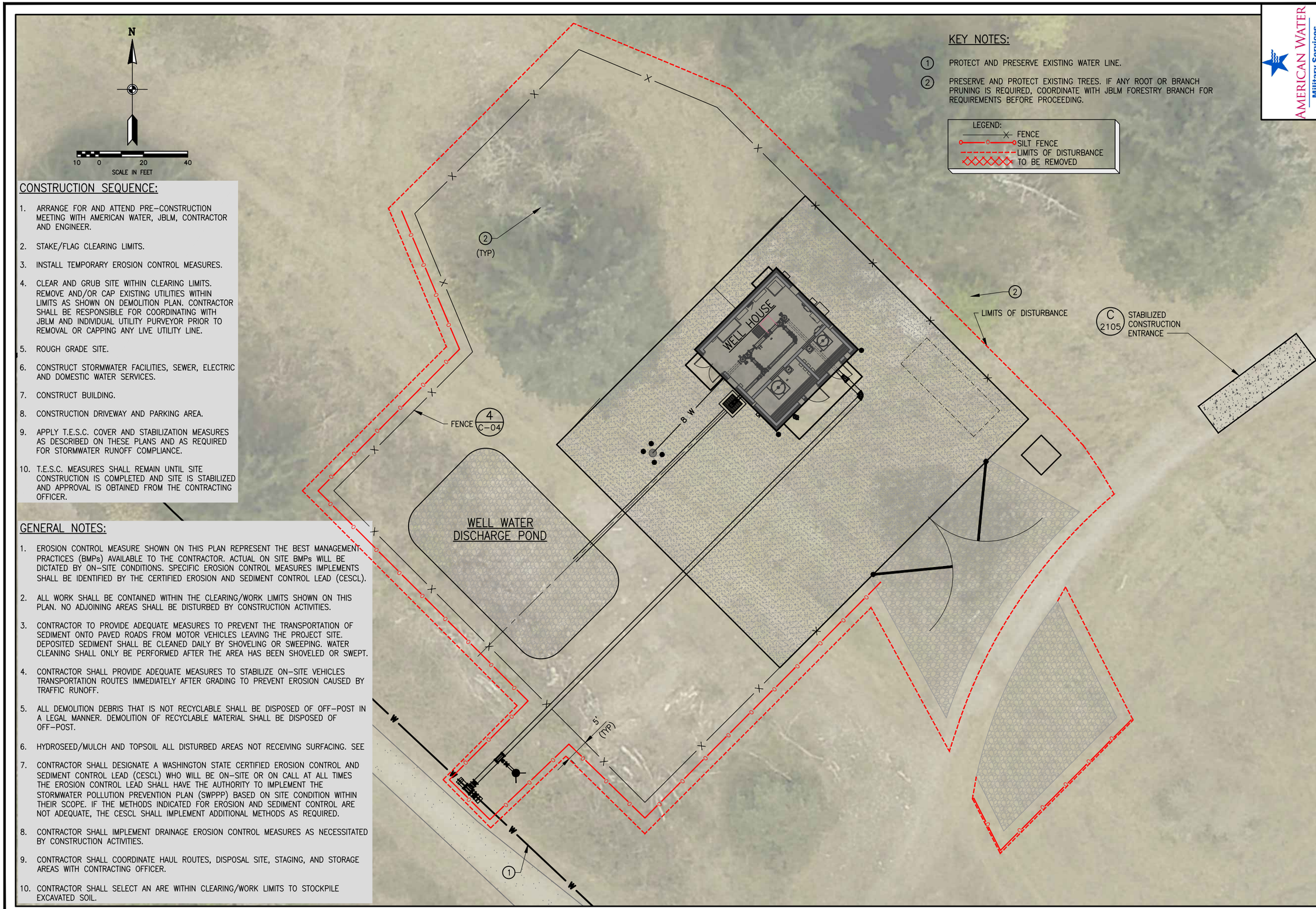

CONSTRUCTION SEQUENCE:

1. ARRANGE FOR AND ATTEND PRE-CONSTRUCTION MEETING WITH AMERICAN WATER, JBLM, CONTRACTOR AND ENGINEER.
2. STAKE/FLAG CLEARING LIMITS.
3. INSTALL TEMPORARY EROSION CONTROL MEASURES.
4. CLEAR AND GRUB SITE WITHIN CLEARING LIMITS. REMOVE AND/OR CAP EXISTING UTILITIES WITHIN LIMITS AS SHOWN ON DEMOLITION PLAN. CONTRACTOR SHALL BE RESPONSIBLE FOR COORDINATING WITH JBLM AND INDIVIDUAL UTILITY PURVEYOR PRIOR TO REMOVAL OR CAPPING ANY LIVE UTILITY LINE.
5. ROUGH GRADE SITE.
6. CONSTRUCT STORMWATER FACILITIES, SEWER, ELECTRIC AND DOMESTIC WATER SERVICES.
7. CONSTRUCT BUILDING.
8. CONSTRUCTION DRIVEWAY AND PARKING AREA.
9. APPLY T.E.S.C. COVER AND STABILIZATION MEASURES AS DESCRIBED ON THESE PLANS AND AS REQUIRED FOR STORMWATER RUNOFF COMPLIANCE.
10. T.E.S.C. MEASURES SHALL REMAIN UNTIL SITE CONSTRUCTION IS COMPLETED AND SITE IS STABILIZED AND APPROVAL IS OBTAINED FROM THE CONTRACTING OFFICER.

GENERAL NOTES:

1. EROSION CONTROL MEASURE SHOWN ON THIS PLAN REPRESENT THE BEST MANAGEMENT PRACTICES (BMPs) AVAILABLE TO THE CONTRACTOR. ACTUAL ON SITE BMPs WILL BE DICTATED BY ON-SITE CONDITIONS. SPECIFIC EROSION CONTROL MEASURES IMPLEMENTS SHALL BE IDENTIFIED BY THE CERTIFIED EROSION AND SEDIMENT CONTROL LEAD (CESCL).
2. ALL WORK SHALL BE CONTAINED WITHIN THE CLEARING/WORK LIMITS SHOWN ON THIS PLAN. NO ADJOINING AREAS SHALL BE DISTURBED BY CONSTRUCTION ACTIVITIES.
3. CONTRACTOR TO PROVIDE ADEQUATE MEASURES TO PREVENT THE TRANSPORTATION OF SEDIMENT ONTO PAVED ROADS FROM MOTOR VEHICLES LEAVING THE PROJECT SITE. DEPOSITED SEDIMENT SHALL BE CLEANED DAILY BY SHOVELING OR SWEEPING. WATER CLEANING SHALL ONLY BE PERFORMED AFTER THE AREA HAS BEEN SHOVELED OR SWEPT.
4. CONTRACTOR SHALL PROVIDE ADEQUATE MEASURES TO STABILIZE ON-SITE VEHICLES TRANSPORTATION ROUTES IMMEDIATELY AFTER GRADING TO PREVENT EROSION CAUSED BY TRAFFIC RUNOFF.
5. ALL DEMOLITION DEBRIS THAT IS NOT RECYCLABLE SHALL BE DISPOSED OF OFF-POST IN A LEGAL MANNER. DEMOLITION OF RECYCLABLE MATERIAL SHALL BE DISPOSED OF OFF-POST.
6. HYDROSEED/MULCH AND TOPSOIL ALL DISTURBED AREAS NOT RECEIVING SURFACING. SEE
7. CONTRACTOR SHALL DESIGNATE A WASHINGTON STATE CERTIFIED EROSION CONTROL AND SEDIMENT CONTROL LEAD (CESCL) WHO WILL BE ON-SITE OR ON CALL AT ALL TIMES THE EROSION CONTROL LEAD SHALL HAVE THE AUTHORITY TO IMPLEMENT THE STORMWATER POLLUTION PREVENTION PLAN (SWPPP) BASED ON SITE CONDITION WITHIN THEIR SCOPE. IF THE METHODS INDICATED FOR EROSION AND SEDIMENT CONTROL ARE NOT ADEQUATE, THE CESCL SHALL IMPLEMENT ADDITIONAL METHODS AS REQUIRED.
8. CONTRACTOR SHALL IMPLEMENT DRAINAGE EROSION CONTROL MEASURES AS NECESSITATED BY CONSTRUCTION ACTIVITIES.
9. CONTRACTOR SHALL COORDINATE HAUL ROUTES, DISPOSAL SITE, STAGING, AND STORAGE AREAS WITH CONTRACTING OFFICER.
10. CONTRACTOR SHALL SELECT AN ARE WITHIN CLEARING/WORK LIMITS TO STOCKPILE EXCAVATED SOIL.

AMERICAN WATER
Military Services
Joint Base Lewis-McChord

BOWEN COLLINS & ASSOCIATES

90% REVIEW

NOT FOR CONSTRUCTION
FOR REVIEW ONLY

NO.	DATE	REV. BY	DESCRIPTION

REVISIONS

AMERICAN WATER (P4-A60MWA2-00002)
WELL 13 REPLACEMENT
FOR AMERICAN WATER MILITARY SERVICES

VERIFY SCALE
BAR IS ONE INCH ON ORIGINAL DRAWING

REVIEW
CHECKED R. ROCHA
APPROVED J. OLDHAM

DESIGN
DESIGN J. OLDHAM
DRAWN R. GARCIA

CIVIL

DEMOLITON AND EROSION CONTROL - PLAN

DATE: DECEMBER 2023
PROJECT NUMBER 427-22-02

DRAWING NO.
C-01
SHEET 06 OF 60

P:\American Water\427-22-01, 02, 03 JBLM Wells\2.0 Design Phase\2.9 Drawings\sht\Well 13\4272202_C-01.dwg Plotted: 12/28/2023 8:39 AM By: Jon Oldham

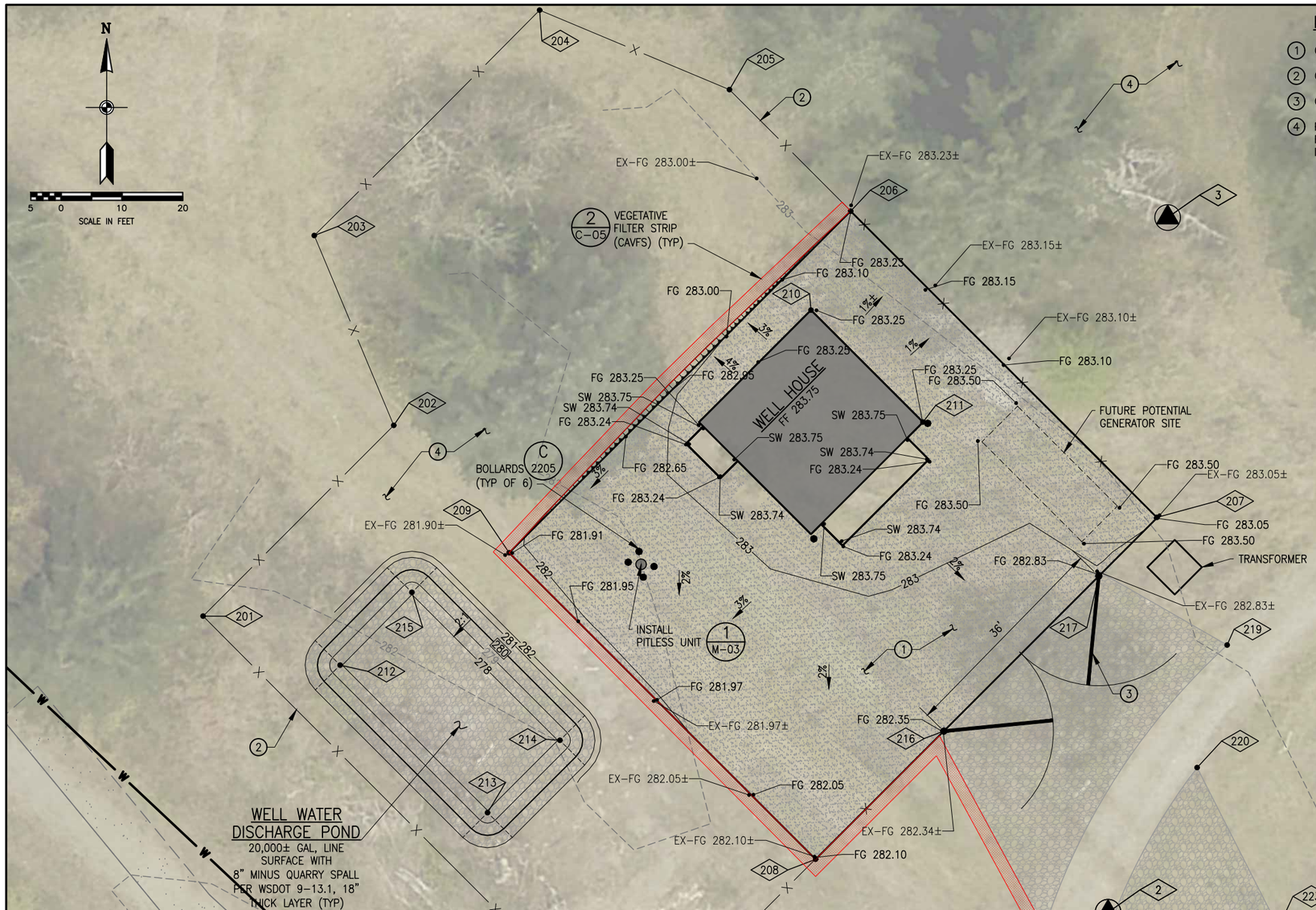

KEY NOTES:

1. GRAVEL AREA, SEE C/2111
2. CHAINLINK SECURITY FENCE FE6-TR-72, SEE 4/C-06
3. CHAINLINK SECURITY GATE FE6-72-DO-HO-36, SEE 5/C-07
4. PRESERVE AND PROTECT ALL NATIVE CONDITIONS WITHIN FENCE BEYOND GRAVEL AREA AND WELL DISCHARGE POND, INCLUDING TREES.

HORIZONTAL DATUM: WASHINGTON STATE PLANE
VERTICAL DATUM: NAVD88

BENCH MARK COORDINATES

POINT NO.	NORTHING	EASTING	DESCRIPTION
1	652910.64	1128304.76	CP_NW 1 1
2	652679.77	1128021.98	CP_HT 2 HUB/NAIL2 HUB/NAIL
3	652793.82	1128031.77	CP_HT 3 HUB/NAIL/3 HUB/NAIL/3 HUB/NAIL

SITE COORDINATES

POINT NO.	NORTHING	EASTING	DESCRIPTION
200	652658.12	1127943.55	PI NEW FENCE
201	652728.38	1127873.40	PI NEW FENCE
202	652759.69	1127904.71	PI NEW FENCE
203	652790.86	1127891.66	PI NEW FENCE
204	652827.86	1127928.65	PI NEW FENCE
205	652814.82	1127959.83	PI NEW FENCE
206	652794.86	1127979.71	PI NEW FENCE, PI NEW GRAVEL AREA
207	652744.61	1128030.03	PI NEW FENCE, PI NEW GRAVEL AREA
208	652688.46	1127973.97	PI NEW GRAVEL AREA
209	652738.79	1127923.65	PI GRAVEL AREA
210	652778.62	1127973.21	NE CORNER OF PUMP STATION
211	652760.24	1127991.59	SE CORNER OF PUMP STATION
212	652720.34	1127895.90	RADIUS POINT 6-FT
213	652696.13	1127920.11	RADIUS POINT 6-FT
214	652708.00	1127931.99	RADIUS POINT 6-FT
215	652732.28	1127907.70	NE CORNER OF POND
216	652709.51	1127995.00	GATE POST
217	652734.97	1128020.45	GATE POST
218	652677.15	1128011.51	PI GRAVEL AREA
219	652723.63	1128041.53	PI GRAVEL AREA
220	652703.53	1128036.60	PI GRAVEL AREA
221	652663.86	1128018.26	PI GRAVEL AREA
222	652651.67	1128024.46	PI GRAVEL AREA
223	652677.25	1128049.96	PI GRAVEL AREA

NOTES:

1. CONTRACTOR SHALL KEEP PROPERTY SITE CLEAN OF CONSTRUCTION DEBRIS AND CONSTRUCTION TRAFFIC AT ALL LOCATIONS.
2. CONTRACTOR SHALL BE RESPONSIBLE FOR OBTAINING ALL LOCAL,STATE AND FEDERAL PERMITS REQUIRED FOR NEW CONSTRUCTION.
3. ALL NON-PAVED DISTURBED AREAS SHALL BE RESTORED TO PRE-CONSTRUCTION CONDITIONS.
4. FINISH GRADE ADJACENT TO BUILDING SHALL BE 0.50' BELOW FINISH FLOOR ELEVATION, UNLESS OTHERWISE NOTED.
5. SPOT ELEVATIONS REPRESENT FINISH GRADE ELEVATIONS. SUBGRADE ELEVATIONS WILL VARY DEPENDING ON TYPE OF SURFACING REQUIRED.
6. MATCH EXISTING GRADES AT INTERFACE WITH EXISTING ASPHALT OR IMPROVED SURFACE. VERIFY EXISTING GRADES AT INTERFACE PRIOR TO ORDERING MATERIALS AND CONSTRUCTING.
7. WELL WATER DISCHARGE POND IS SIZED TO ACCOMMODATE 10 MINUTES OF DISCHARGE AT 1,000 GPM. THIS FLOW IS ANTICIPATED DAILY. INFILTRATION IS ESTIMATED AT 15 IN/HR PER THE GEOTECHNICAL REPORT.

AMERICAN WATER
Military Services
Joint Base Lewis-McChord

BOWEN COLLINS & ASSOCIATES

90% REVIEW

NOT FOR CONSTRUCTION
FOR REVIEW ONLY

NO.	DATE	REV. BY	DESCRIPTION

REVISIONS

AMERICAN WATER (P4-A60MWA2-00002)
WELL 13 REPLACEMENT
FOR AMERICAN WATER MILITARY SERVICES

VERIFY SCALE
BAR IS ONE INCH ON ORIGINAL DRAWING

REVIEW
CHECKED R. ROCHA
APPROVED J. OLDHAM

DESIGN
DESIGN R. GARCIA
DRAWN R. GARCIA

CIVIL
SITE AND GRADING PLAN

PROJECT NUMBER 427-22-02
DATE: DECEMBER 2023

DRAWING NO.
C-02

SHEET 07 OF 60

P:\American Water\427-22-01, 02, 03 JBLM Wells\2.0 Design Phase\2.9 Drawings\sht\Well 13\4272202_C-02.dwg Plotted: 12/28/2023 8:50 AM By: Jon Oldham

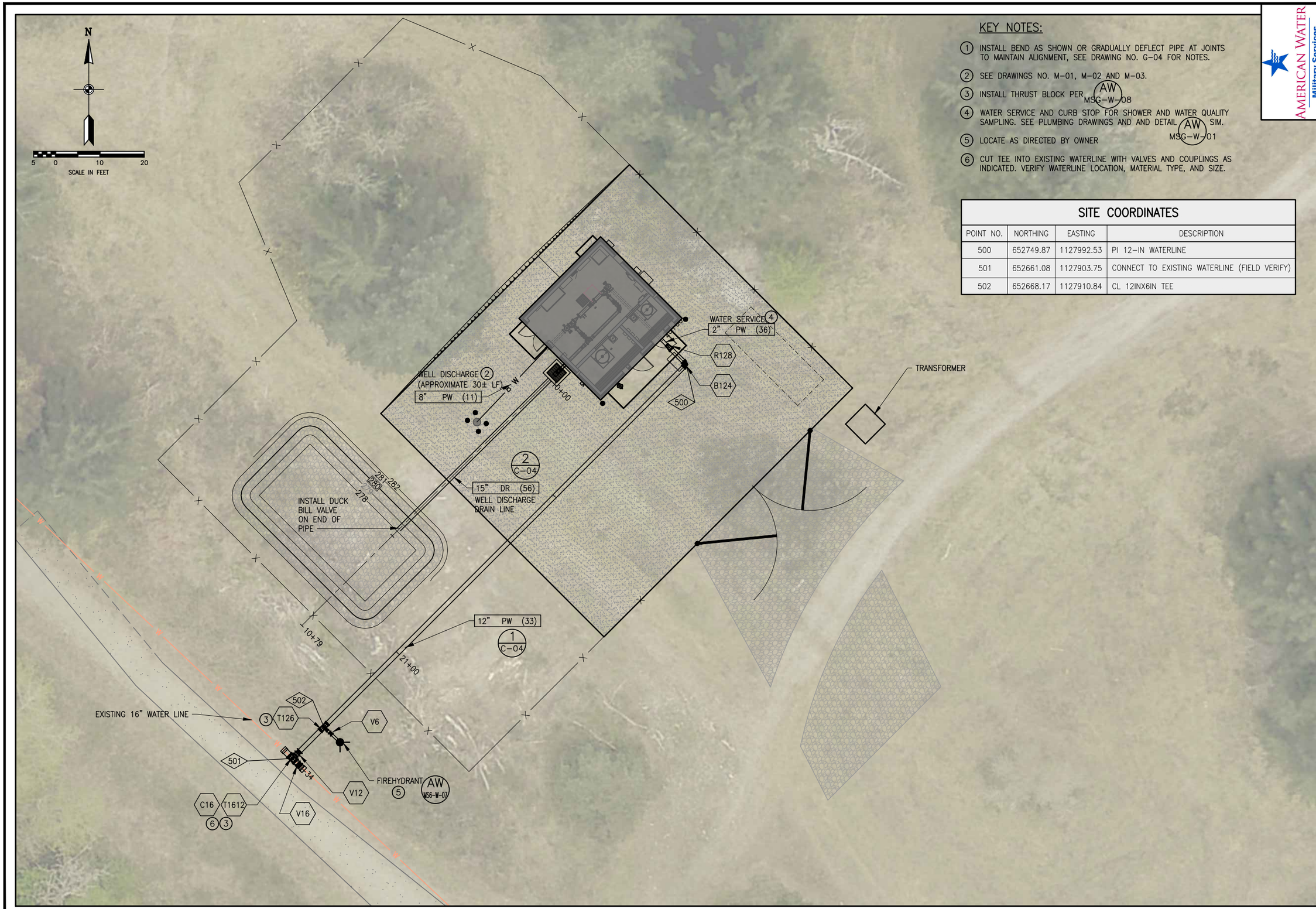

KEY NOTES:

1. INSTALL BEND AS SHOWN OR GRADUALLY DEFLECT PIPE AT JOINTS TO MAINTAIN ALIGNMENT, SEE DRAWING NO. G-04 FOR NOTES.
2. SEE DRAWINGS NO. M-01, M-02 AND M-03.
3. INSTALL THRUST BLOCK PER AW MSG-W-08
4. WATER SERVICE AND CURB STOP FOR SHOWER AND WATER QUALITY SAMPLING. SEE PLUMBING DRAWINGS AND AND DETAIL AW MSG-W-01 SIM.
5. LOCATE AS DIRECTED BY OWNER
6. CUT TEE INTO EXISTING WATERLINE WITH VALVES AND COUPLINGS AS INDICATED. VERIFY WATERLINE LOCATION, MATERIAL TYPE, AND SIZE.

SITE COORDINATES

POINT NO.	NORTHING	EASTING	DESCRIPTION
500	652749.87	1127992.53	PI 12-IN WATERLINE
501	652661.08	1127903.75	CONNECT TO EXISTING WATERLINE (FIELD VERIFY)
502	652668.17	1127910.84	CL 12INX6IN TEE

AMERICAN WATER
Military Services
Joint Base Lewis-McChord

BOWEN COLLINS & ASSOCIATES

90% REVIEW

NOT FOR CONSTRUCTION
FOR REVIEW ONLY

NO.	DATE	REV BY	DESCRIPTION

REVISIONS

AMERICAN WATER (P4-A60MWA2-00002)
WELL 13 REPLACEMENT
FOR AMERICAN WATER MILITARY SERVICES

VERIFY SCALE
BAR IS ONE INCH ON ORIGINAL DRAWING

DESIGN
DESIGN R. GARCIA
DRAWN R.GARCIA

REVIEW
CHECKED R. ROCHA
APPROVED J. OLDHAM

CIVIL

SITE UTILITY

DATE: DECEMBER 2023
PROJECT NUMBER 427-22-02

DRAWING NO.
C-03

SHEET 08 OF 60

P:\American Water\427-22-01, 02, 03 JBLM Wells\2.0 Design Phase\2.9 Drawings\sht\Well 13\427Z202_C-03.dwg Plotted: 12/27/2023 2:12 PM By: Rodolfo Garcia

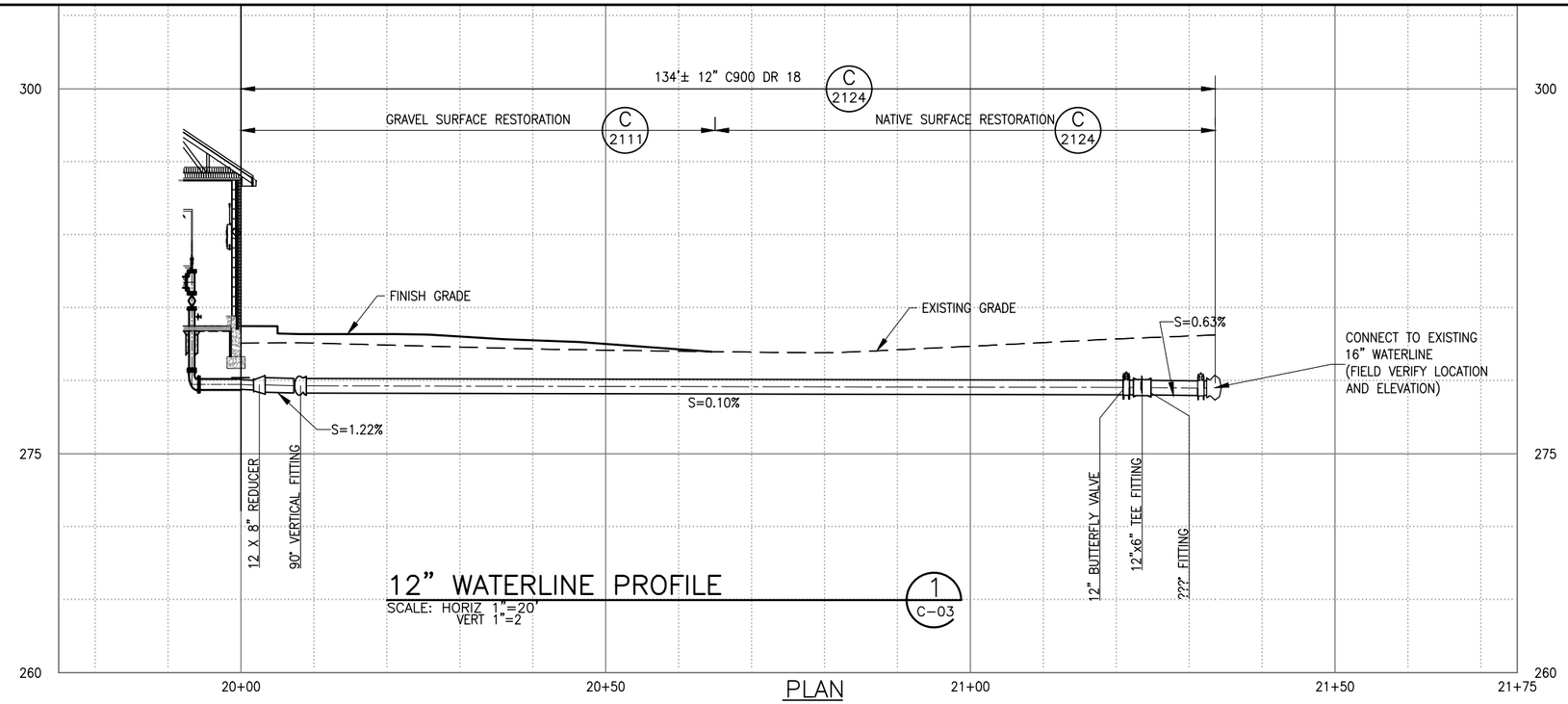

12" WATERLINE PROFILE (1 / C-03)

SCALE: HORIZ 1"=20'
VERT 1"=2

PLAN

IMAGE: HEXAGON

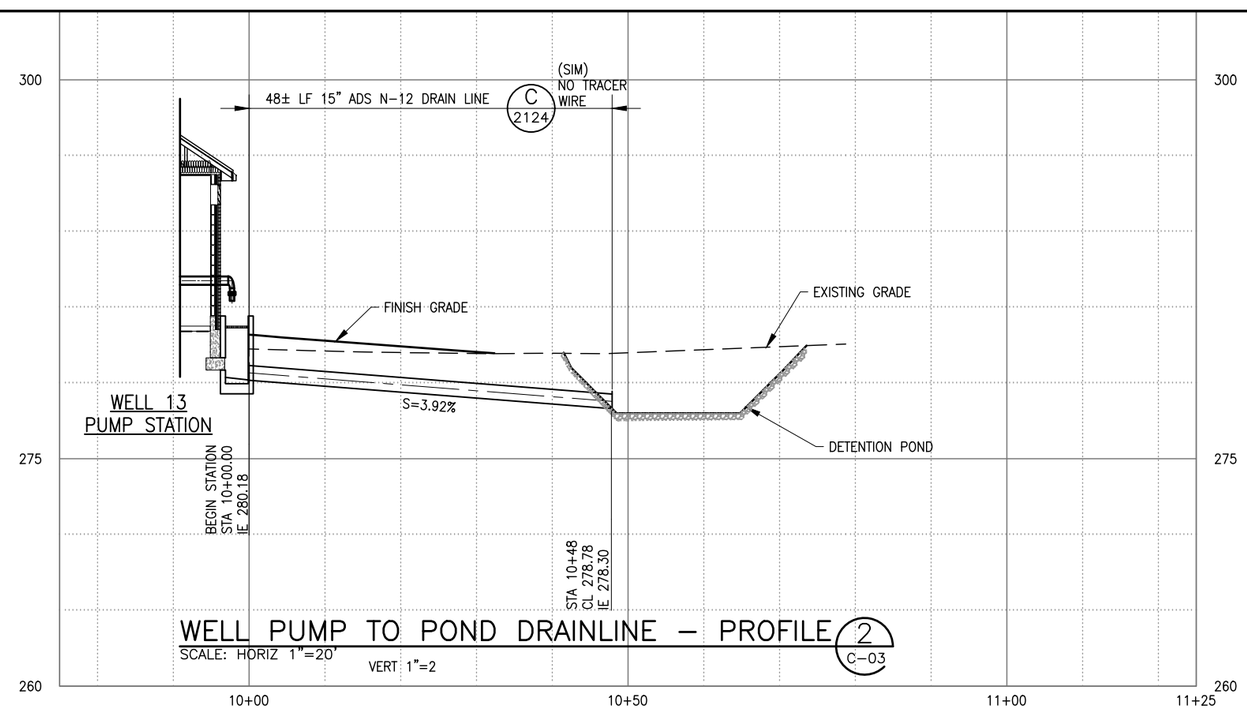

WELL PUMP TO POND DRAINLINE – PROFILE (2 / C-03)

SCALE: HORIZ 1"=20'
VERT 1"=2

AMERICAN WATER
Military Services
Joint Base Lewis-McChord

BOWEN COLLINS & ASSOCIATES

90% REVIEW

NOT FOR CONSTRUCTION
FOR REVIEW ONLY

NO.	DATE	REV. BY	DESCRIPTION

REVISIONS

VERIFY SCALE
BAR IS ONE INCH ON ORIGINAL DRAWING

AMERICAN WATER (P4-A60/MWA2-00002)
WELL 13 REPLACEMENT
FOR AMERICAN WATER MILITARY SERVICES

REVIEW
CHECKED R. ROCHA
APPROVED J. OLDHAM

DESIGN
DESIGN J. H./R.G.
DRAWN R. GARCIA

CIVIL
NEW 12" WATERLINE AND PUMP TO POND DRAINLINE PROFILES

PROJECT NUMBER 427-22-02
DATE: DECEMBER 2023

DRAWING NO.
C-04

SHEET 09 OF 60

P:\American Water\427-22-01, 02, 03 JBLM Wells\2.0 Design Phase\2.9 Drawings\sht\Well 13\427202_C-04.dwg Plotted: 12/27/2023 11:32 AM By: Jon Oldham

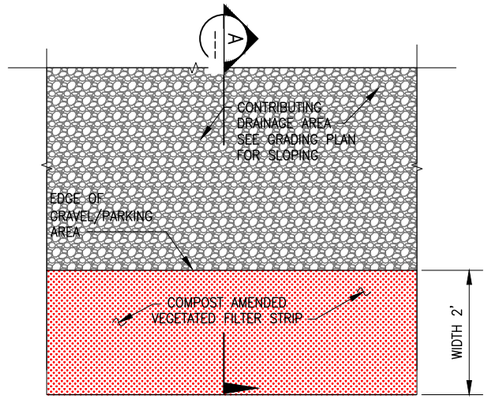

PLAN VIEW

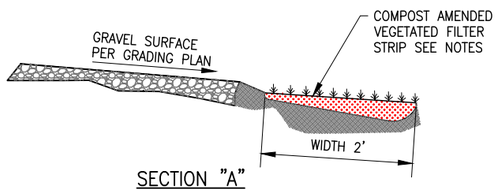

SECTION "A"

VEGETATIVE FILTER STRIP (CAVFS) – DETAIL

NTS

2
C-02

GRADING, TOPSOIL PLACEMENT AND COMPACTED SOILS NOTES:
FINISH SUBGRADE AND TOPSOIL PLACEMENT AND GRADING SHALL CONSIST OF THE FOLLOWING:

1. PREPARE SUBGRADE BY ROUGH GRADING AND REMOVING ALL IRREGULARITIES AND DEBRIS, THEN TILL AND SCARIFY SUBSOIL TO A DEPTH OF 6 INCHES BEFORE PLACING COMPOST MATERIAL AND TOPSOIL. SUBGRADE SURFACE SHALL NOT BE SMOOTH, BUT A ROUGH SURFACE SHALL EXIST FOR A TRANSITION ZONE OF TOPSOIL TO SUBSOIL. IF AREAS OF SUBGRADE BECOME COMPACTED BEFORE TOPSOIL IS PLACED, SUBGRADE SHALL BE TILLED AGAIN BEFORE TOPSOIL PLACEMENT.
2. PLACE 6.25–INCHES OF TOPSOIL OVER ALL AREAS TO BE SEEDED, THEN PLACE 1.75–INCHES OF COMPOSTED MATERIAL. ROTOTILL COMPOST MATERIAL AND TOPSOIL.
3. AFTER TILLING, BRING AREAS TO UNIFORM GRADES BY FLOATING AND/OR HAND RAKING. IT IS BEST IF SOIL IN SEEDED AREAS HAVE SMALL RUTS AND A ROUGH SURFACE TO HOLD THE SEED. IF SLOPED, THE LINES OF THE RAKE TRACKS SHALL BE PERPENDICULAR TO THE SLOPE TO MINIMIZE EROSION.
4. REMOVE WASTE MATERIALS OVER 1" IN SIZE SUCH AS STONES, ROOTS, OR OTHER UNDESIRABLE FOREIGN MATERIALS PRIOR TO FINISH RAKING, DISHING, DRAGGING, AND SMOOTHING SOIL READY FOR PLANTING.
5. THE FINAL SOIL MIXTURE SHOULD FOLLOW COMPOSITION AND HYDRAULIC CONDUCTIVITY STANDARDS DETERMINED BY THE STORMWATER MANAGEMENT MANUAL FOR WESTERN WASHINGTON.
6. COMPOST UTILIZED SHALL CONSIST OF COMPOSED LEAVES AND YARD GRASS. COMPOST SHALL MEET THE REQUIREMENTS IN THE SPECIFICATIONS.
7. AREAS TO BE SEEDED ARE DESIGNATED ON SHEET C–02 FOR COMPOST AMENDED VEGETATION STRIPS (CAVFS) AND WILL BE SEEDED WITH THE SEED MIX SHOWN ON SHEET C–05. SEED MIX SHALL BE SUPPLIED ON A PURE LIVE SEED (PLS) BASIS AND PROVIDE FULL COVERAGE OF DESIGNATED SEEDING AREA.
8. SEEDED AREAS SHALL ONLY BE HYDROSEED WITH TACKIFIER AND MULCH. CONTRACTOR TO REFERENCE LANDSCAPE SPECIFICATIONS FOR HYDROSEED METHODS.
9. NO GRADING OR SOIL PLACEMENT SHALL BE UNDERTAKEN WHEN SOILS ARE WET OR FROZEN. SEEDING, FERTILIZING, OR MULCHING WILL NOT BE PERMITTED WHEN WIND VELOCITIES EXCEED 5 MILES PER HOUR OR WHEN THE GROUND IS FROZEN, UNDULY WET, OR WHEN TEMPERATURES EXCEED 75°F.
10. AFTER THE SEEDING AREAS ARE ESTABLISHED THEY SHALL BE FERTILIZED WITH MILORGANITE FERTILIZER. SEEDING AREAS TO BE ESTABLISHED TO A UNIFORM COVERAGE OF 60 PERCENT AT THE END OF THE FIRST GROWING SEASON, BUT PRIOR TO FINAL RELEASE OF CONTRACTOR WARRANTY. AREAS THAT ARE BELOW 60 PERCENT COVERAGE SHALL BE RE–SEEDED.

COMPOST AMMENDED VEGETATION STRIP (CAVFS) NOTES:

1. CHANGES TO VEGETATION DESIGN OR METHODOLOGY MUST BE SUBMITTED TO THE ENGINEER FOR APPROVAL.
2. CONTRACTOR SHALL CONFORM TO ALL APPLICABLE STATE AND CITY/COUNTY CODES.
3. LANDSCAPE WORK, INCLUDING SEEDING, WEEDING, RE–SEEDING, AND FERTILIZATION SHALL BE UNDER WARRANTY AND MAINTAINED BY CONTRACTOR FOR ONE YEAR AFTER SUBSTANTIAL COMPLETION HAS BEEN ISSUED AND ALL PUNCH LIST ITEMS RELATED TO CAVFS WORK FROM SUBSTANTIAL COMPLETION HAVE BEEN COMPLETED.
4. SEE NOTES ON HYDROSEEDING ON SHEET G–05 FOR SEEDING WINDOWS.
5. TOPSOIL SHALL MEET STANDARDS REQUIRED BY THE STORMWATER MANAGEMENT MANUAL FOR WESTERN WASHINGTON AND BE IN CONFORMANCE WITH THE SPECIFICATIONS. ALL LABORATORY SOIL TESTING SHALL BE ORDERED AND PAID FOR BY THE CONTRACTOR.

SEED MIX

SEED NO.	SPECIES NAME		Number of Seeds per Pound (LBS)	SEED		
	BOTANICAL NAME	COMMON NAME		Pounds (LBS) of Pure Live Seed (PLS)/Acre	Percentage of Seed mixture	Number of Seeds (PLS/Sq. Foot)
	Wetland Mix					
1	*Bromus vulgaris*	Columbia Brome	108,000	8.00	17.96%	20
2	*Deschampsia cespitosa*	Tufted Hairgrass	2,000,000	0.25	10.39%	11
3	*Symphyotrichum chilense*	Pacific Aster	2,668,000	1.00	55.44%	61
4	*Triticum aestivum x Secale cereale*	Triticale	13,000	60.00	16.21%	18
			TOTALS =	69.25	100.00%	110

AMERICAN WATER
Military Services
Joint Base Lewis-McChord

BOWEN COLLINS & ASSOCIATES

90% REVIEW

NOT FOR CONSTRUCTION
FOR REVIEW ONLY

REVISIONS

NO.	DATE	REV. BY	DESCRIPTION

AMERICAN WATER (P4-A60MWA2-00002)
WELL 13 REPLACEMENT
FOR AMERICAN WATER MILITARY SERVICES

VERIFY SCALE
BAR IS ONE INCH ON ORIGINAL DRAWING

REVIEW
CHECKED R. ROCHA
APPROVED J. OLDHAM

DESIGN
DESIGN J. OLDHAM
DRAWN R. GARCIA

CIVIL

DRAINAGE DETAILS

PROJECT NUMBER 427-22-02
DATE: DECEMBER 2023

DRAWING NO.
C-05

SHEET 10 OF 60

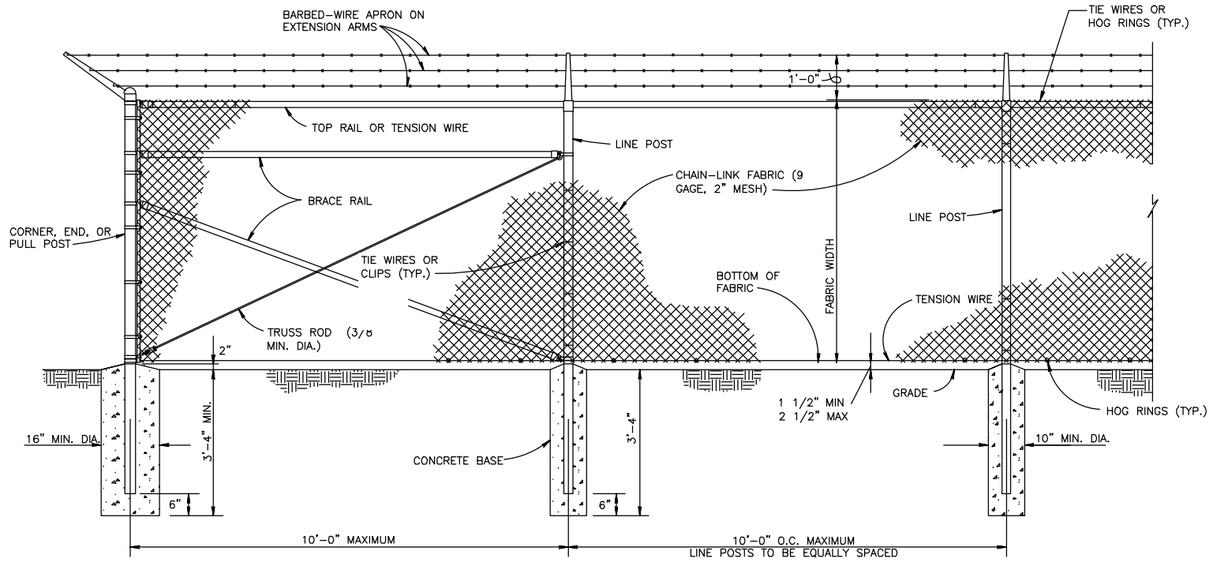

CHAIN-LINK SECURITY FENCE DETAIL NO SCALE

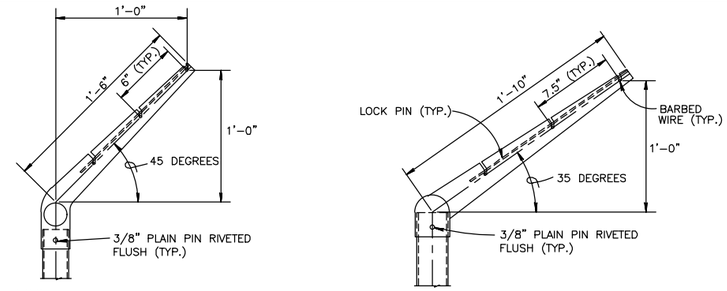

USE AND SECTION	STEEL POST SCHEDULE — MINIMUM OUTSIDE DIMENSIONS (NOMINAL)		
	FABRIC WIDTH 72" OR LESS	FABRIC WIDTH 84" TO 96"	FABRIC WIDTH 108" AND OVER
CORNER, END & PULL POSTS			
TUBULAR – ROUND	2.375" O.D.	2.875" O.D.	4.00" O.D.
TUBULAR – SQUARE	2.00" SQ.	2.50" SQ.	3.00" SQ.
C-SECTION (ROLL-FORMED)	3.50" X 3.50"	3.50" X 3.50"	———
LINE POSTS			
TUBULAR – ROUND	1.90" O.D.	2.375" O.D.	2.875" O.D.
H-SECTION	2.25" X 1.70"	2.25" X 1.70"	2.25" X 1.70"
C-SECTION (ROLL-FORMED)	1.875" X 1.625"	2.25" X 1.70"	———
TOP, BOTTOM & BRACE RAILS			
TUBULAR – ROUND	1.66" O.D.		
TUBULAR – SQUARE	1.50" SQ.		
H-SECTION	1.625" X 1.50"		
C-SECTION (ROLL-FORMED)	1.625" X 1.25"		

NOTES:

1. DETAILS SHOWN ARE TO CLARIFY REQUIREMENTS AND ARE NOT INTENDED TO LIMIT OTHER TYPES OF FENCE SECTIONS AND METHODS OF INSTALLATION THAT COMPLY WITH THE SPECIFICATIONS.

2. WIRE TIES, RAILS, POSTS, AND BRACES SHALL BE CONSTRUCTED ON THE SECURE SIDE OF THE FENCE ALIGNMENT. CHAIN-LINK FABRIC SHALL BE PLACED ON THE SIDE OPPOSITE THE SECURE AREA.

3. UNLESS SPECIFICALLY SHOWN OR SPECIFIED, ALL FE6 FENCE SHALL HAVE AN APRON EXTENDED OUTWARD FROM THE AREA BEING PROTECTED.

4. C-SECTION POSTS SHALL BE INSTALLED SO THAT THE VOID INSIDE THE POST IS COMPLETELY FILLED WITH CONCRETE UP TO THE TOP OF THE FOUNDATION.

FENCE LEGEND:

TYPE FE5 – CHAIN-LINK FENCE WITHOUT BARBED-WIRE APRON
TYPE FE6 – CHAIN-LINK FENCE W/BARBED-WIRE ON SINGLE OUTRIGGER
TYPE FE7 – CHAIN-LINK FENCE W/BARBED WIRE ON DOUBLE OUTRIGGER
TYPE FE8 – CHAIN-LINK FENCE W/BARBED-WIRE AND BARBED-TAPE ON DOUBLE OUTRIGGER
TR – FENCE WITH TOP RAIL AND TENSION WIRE AT BOTTOM
TBR – FENCE WITH TOP AND BOTTOM RAILS
TWB – TENSION WIRE TOP AND BOTTOM
TWBR – FENCE WITH TOP TENSION WIRE AND BOTTOM RAIL
FINAL NUMBER IS FABRIC WIDTH IN INCHES.

EXAMPLES

FE6-TR-72 – CHAIN-LINK SECURITY FENCE WITH BARBED-WIRE ON SINGLE OUTRIGGER, TOP RAIL, AND 72 INCH FABRIC WIDTH.

FE5-TWB-84 – CHAIN-LINK SECURITY FENCE WITH NO APRON, TOP AND BOTTOM TENSION WIRE, AND 84 INCH FABRIC WIDTH.

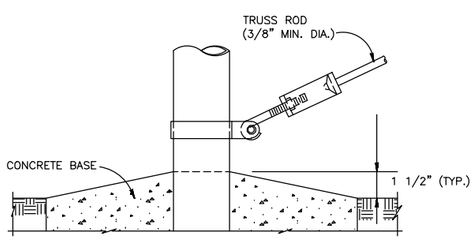

TRUSS ROD AND BAND

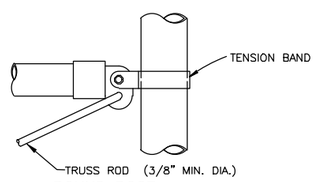

ROUND POST

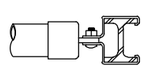

H-BEAM

BRACE RAIL CLAMP DETAILS

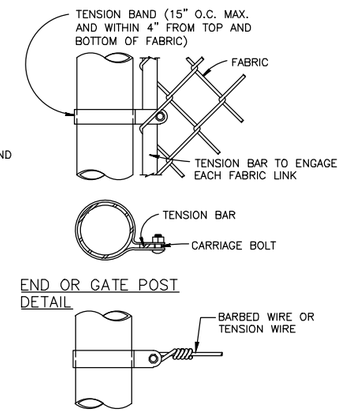

END OR GATE POST DETAIL

TENSION BAND DETAIL

FASTENING DETAILS NO SCALE

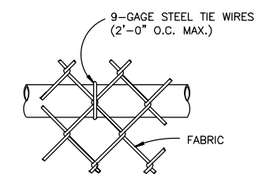

TOP OR BRACE RAIL ATTACHMENT

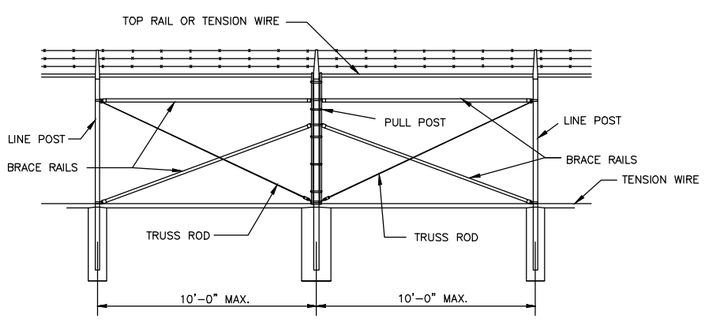

BRACE PANEL DETAIL NO SCALE

NOTE:
PROVIDE BRACE PANEL WHENEVER STRAIGHT RUNS EXCEED 500 FEET.

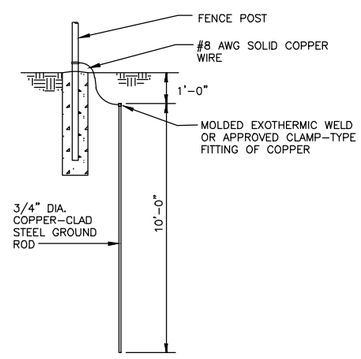

GROUNDING DETAIL NO SCALE

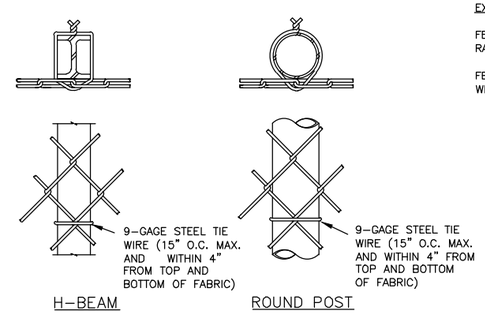

LINE POST ATTACHMENTS NO SCALE

FE6 CHAINLINK SECURITY FENCE DETAILS

NO SCALE

4
C-01

AMERICAN WATER
Military Services
Joint Base Lewis-McChord

BOWEN COLLINS & ASSOCIATES

90% REVIEW

NOT FOR CONSTRUCTION
FOR REVIEW ONLY

NO.	DATE	REV. BY	DESCRIPTION

REVISIONS

AMERICAN WATER (P4-A60MWA2-00002)
WELL 13 REPLACEMENT
FOR AMERICAN WATER MILITARY SERVICES

VERIFY SCALE
BAR IS ONE INCH ON ORIGINAL DRAWING

REVIEW
CHECKED R. ROCHA
APPROVED J. OLDHAM

DESIGN
DESIGN J. OLDHAM
DRAWN R. GARCIA

GENERAL

FE6 CHAINLINK SECURITY FENCE DETAILS

DATE: DECEMBER 2023
PROJECT NUMBER 427-22-02

DRAWING NO.
C-06

SHEET 11 OF 60

P:\American Water\427-22-01, 02, 03 JBLM Wells\2.0 Design Phase\2.9 Drawings\shtl\Well 13\4272202_C-06.dwg Plotted: 12/27/2023 2:49 PM By: Rodolfo Garcia

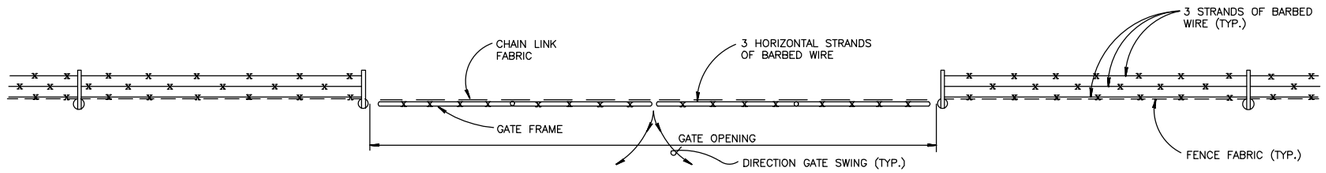

PLAN

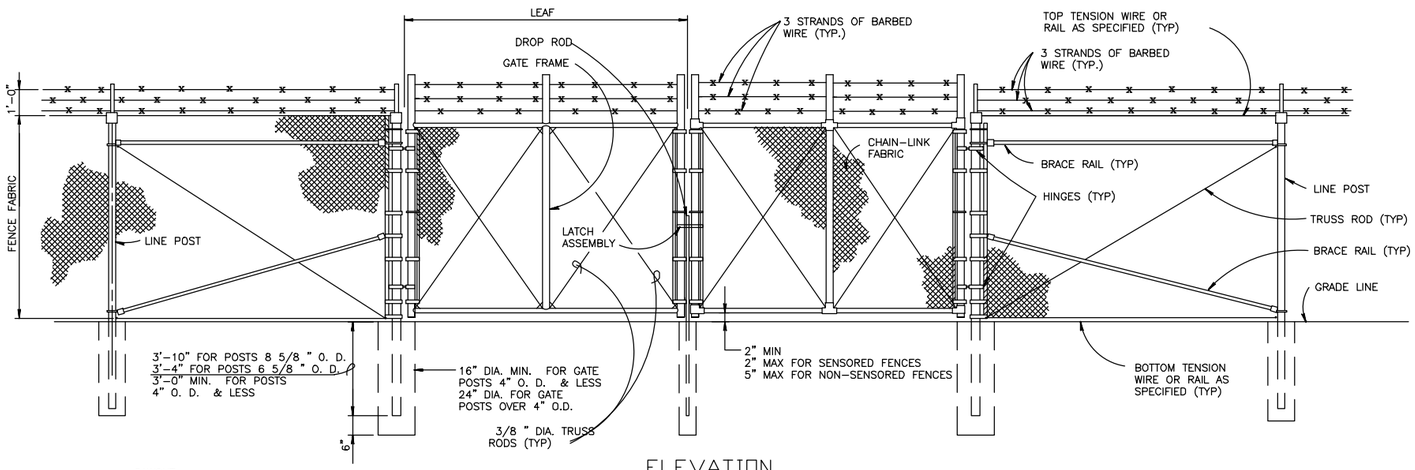

ELEVATION

DOUBLE SWING GATE (TYPE FE-6 FENCE)

NO SCALE

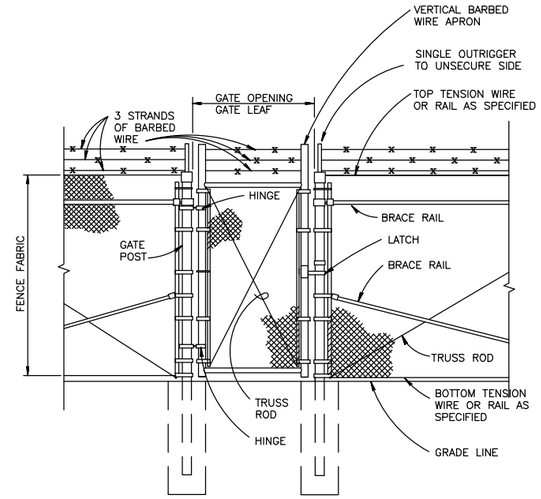

PERSONNEL GATE
TYPE FE-6 FENCE

NO SCALE

NOTES:

1. FOR NON-SENSORED FENCES, DETAILS SHOWN ARE TO CLARIFY REQUIREMENTS AND ARE NOT INTENDED TO LIMIT OTHER TYPE OF FENCE SECTIONS AND METHODS OF INSTALLATION WHICH COMPLY WITH THE SPECIFICATIONS.
2. SWING GATES SHALL BE CONSTRUCTED WITH DROP RODS, PADLOCKS, LATCH ASSEMBLY AND GATE KEEPERS EXCEPT AS NOTED.
3. ALL GATE FRAMES SHALL MEET THE MINIMUM REQUIREMENTS OF ASTM F900 1.90" NOMINAL (ROUND) OR 2.00" NOMINAL (SQUARE). GATE FRAMES SHALL BE OF WELDED CONSTRUCTION OR SHALL BE ASSEMBLED USING HEAVY FITTINGS. AT CONTRACTOR'S OPTION A WELDED HORIZONTAL BRACE MAY BE USED IN LIEU OF TRUSS RODS TO BRACE ALL-WELDED GATE FRAMES. THE CONTRACTOR SHALL BE RESPONSIBLE FOR THE PROPER RIGID CONSTRUCTION OF ALL GATES SUPPLIED.
4. GATES SHALL BE DESIGNATED AS FOLLOWS:

FENCE TYPE	–	FE5, FE6, ETC.
FENCE HEIGHT	–	INCHES
TYPE OPENING	–	SO (SINGLE)
	–	DO (DOUBLE)
HINGE	–	RA (STANDARD)
	–	HO (OFFSET)
OPENING	–	FEET (CLEAR OPENING BETWEEN GATE POSTS)

EXAMPLES: FE6-84-DO-RA-24
FE5-48-SO-HO-6

GATE POST SCHEDULE

GATE LEAF WIDTH (NOMINAL)	OUTSIDE DIMENSION (NOMINAL)
6' OR LESS	2.875" OD 2.5" SQ
GREATER THAN 6' TO 12'	4.0" OD
GREATER THAN 12' TO 18'	6.625" OD
MORE THAN 18'	8.625" OD

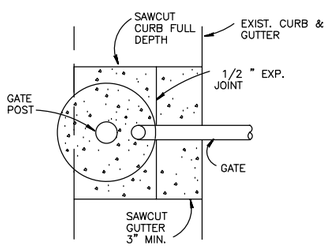

PLAN

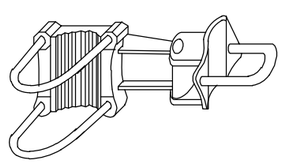

OFFSET HINGE

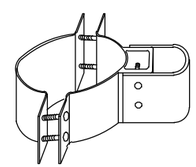

STANDARD HINGE

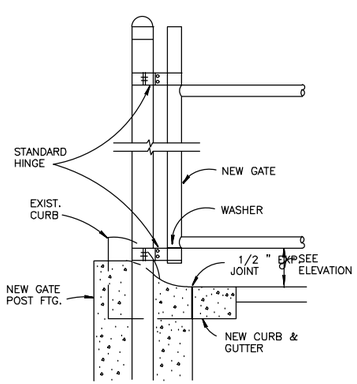

GATE POST SECTION
AT CURB AND GUTTER

NO SCALE

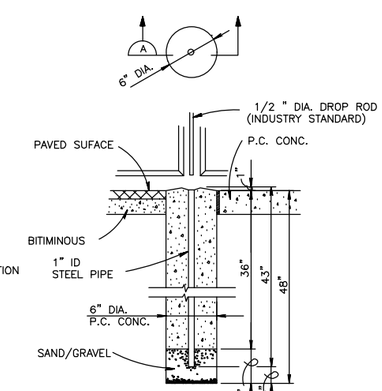

DROP ROD FOUNDATION

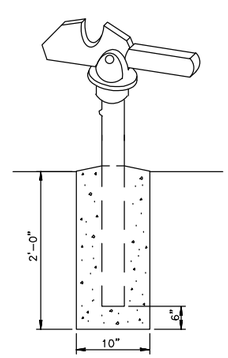

GATE KEEPER
(TO HOLD GATE OPEN)

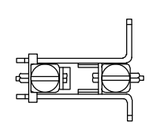

LATCH ASSEMBLY

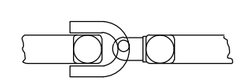

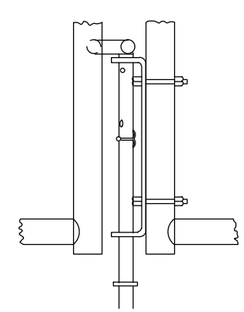

DROP ROD ASSEMBLY

SWING GATE DETAILS

NO SCALE

FE6 CHAINLINK SECURITY GATE DETAILS

NO SCALE

5
C-02

AMERICAN WATER
Military Services
Joint Base Lewis-McChord

BOWEN COLLINS & ASSOCIATES

90% REVIEW

NOT FOR CONSTRUCTION
FOR REVIEW ONLY

NO.	DATE	REV. BY	DESCRIPTION

REVISIONS

AMERICAN WATER (P4-A60MWA2-00002)
WELL 13 REPLACEMENT
FOR AMERICAN WATER MILITARY SERVICES

VERIFY SCALE
BAR IS ONE INCH ON ORIGINAL DRAWING

REVIEW
CHECKED R. ROCHA
APPROVED J. OLDHAM

DESIGN
DESIGN J. OLDHAM
DRAWN R. GARCIA

GENERAL

FE6 CHAINLINK SECURITY
FENCE GATE DETAILS

DATE: DECEMBER 2023
PROJECT NUMBER 427-22-02

DRAWING NO.
C-07

SHEET 12 OF 60

P:\American Water\427-22-01, 02, 03 JBLM Wells\2.0 Design Phase\2.9 Drawings\sht\Well 13\4272202_C-07.dwg Plotted: 12/27/2023 2:54 PM By: Rodolfo Garcia

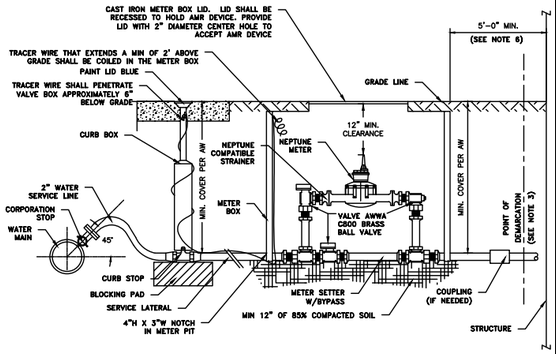

NOTES:

1. CENTER METER IN BOX. MIN 6" CLEARANCE ON ALL SIDES.
2. TRENCH, INSTALL, AND BACKFILL SERVICE LINE IN ACCORDANCE WITH AW SPECIFICATIONS.
3. POINT OF DEMARCATION FOR SERVICE LINE OWNERSHIP PER PRIME CONTRACT BETWEEN AW AND GOVERNMENT.
4. SERVICE LINE MATERIALS SHALL MEET AW SPECIFICATIONS.
5. PROVIDE TRACE WIRE ALONG WATER SERVICE LINE. TRACE WIRE SHALL EXTEND INTO THE CURB BOX AND METER PIT AND TERMINATE IN THE METER PIT.
6. IF WATER SERVICE BETWEEN MAIN AND WATER METER IS REPLACED WITH NON-METALIC PIPING, THERE SHALL BE A MINIMUM LENGTH OF TEN (10) FT OF METALLIC PIPING BETWEEN THE BUILDING STRUCTURE AND METER PIT TO MAINTAIN PROPER GROUNDING OF BUILDING'S ELECTRICAL SYSTEM.

2" WATER SERVICE INSTALLATION

REVISIONS
5/10 – MSG EDITS
1/12 – MSG EDITS
6/13 – MSG EDITS
7/14 – MSG EDITS
1/16 – MSG EDITS

AMERICAN WATER MILITARY SERVICES GROUP
CIVIL
2" WATER SERVICE INSTALLATION DETAIL

AMERICAN WATER MILITARY SERVICES GROUP CAMDEN, NJ 08102

AMERICAN WATER M.S.G. 1 WATER STREET CAMDEN, NJ 08102 — AMERICAN WATER

DRAWN BY Z. ALAM | PROJECT ENG'R PDK APPROVED | DATE 05-03-2010 PROJECT N/A | USE DIMENSIONS ONLY SCALE N.T.S.

USE APPROVED DRAWINGS ONLY FOR CONSTRUCTION PURPOSES | AW MSG-W-01

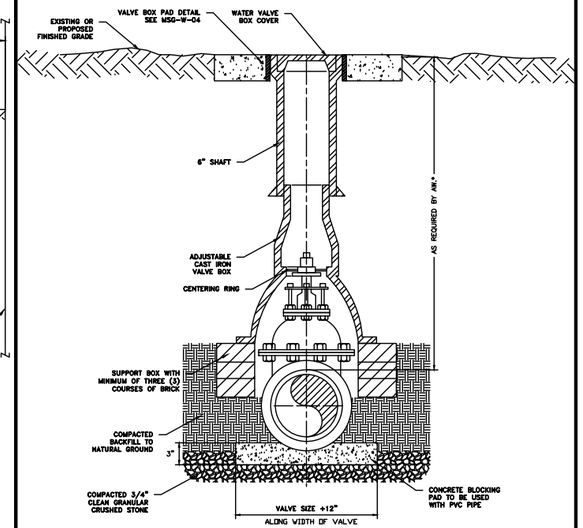

GATE VALVE AND VALVE BOX

* MINIMUM COVER BASED ON PROJECT LOCATION	
DEPTH COVER	LOCATION
36"	AL, IL, IA, MD, OK, KS, TX, CA & VA
42"	NJ
48"	UT

REVISIONS
6/13 – MSG EDITS
7/14 – MSG EDITS
1/16 – MSG EDITS

AMERICAN WATER MILITARY SERVICES GROUP
CIVIL
GATE VALVE AND VALVE BOX DETAIL

AMERICAN WATER MILITARY SERVICES GROUP CAMDEN, NJ 08102

AMERICAN WATER M.S.G. 1 WATER STREET CAMDEN, NJ 08102 — AMERICAN WATER

DRAWN BY J. ABRERA | PROJECT ENG'R J. DENISSO APPROVED | DATE 05-03-2010 PROJECT N/A | USE DIMENSIONS ONLY SCALE N.T.S.

USE APPROVED DRAWINGS ONLY FOR CONSTRUCTION PURPOSES | AW MSG-W-03

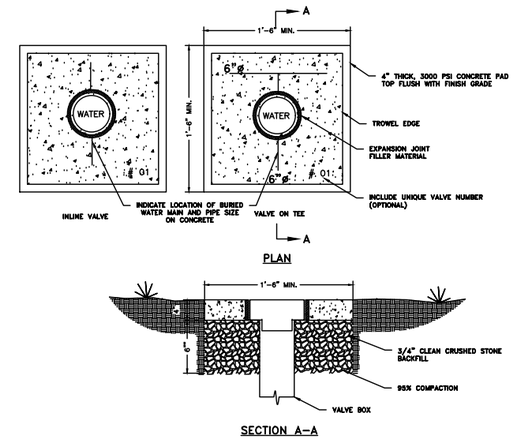

CONCRETE VALVE BOX PAD DETAIL

NOTE:

1. IF PAD IS NOT TO BE POURED IMMEDIATELY AFTER VALVE BOX INSTALLATION, HOLE SHOULD BE BACKFILLED TO GRADE WITH 3/4" CLEAN CRUSHED STONE BACKFILL.

REVISIONS
REV 1 – 6/22/10
6/13 – MSG EDITS
7/14 – MSG EDITS
1/16 – MSG EDITS

AMERICAN WATER MILITARY SERVICES GROUP
CIVIL
CONCRETE VALVE BOX PAD DETAIL

AMERICAN WATER MILITARY SERVICES GROUP CAMDEN, NJ 08102

AMERICAN WATER M.S.G. 1 WATER STREET CAMDEN, NJ 08102 — AMERICAN WATER

DRAWN BY J. ABRERA | PROJECT ENG'R PDK APPROVED | DATE 05-03-2010 PROJECT N/A | USE DIMENSIONS ONLY SCALE N.T.S.

USE APPROVED DRAWINGS ONLY FOR CONSTRUCTION PURPOSES | AW MSG-W-04

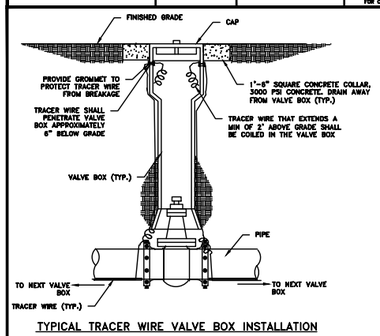

TYPICAL TRACER WIRE VALVE BOX INSTALLATION

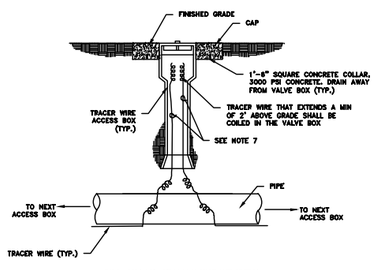

NOTE: FOR USE WITH THE SANITARY SEWER SYSTEM AND OTHER APPLICATIONS WHERE VALVE BOXES ARE NOT TYPICALLY PRESENT.

TYPICAL TRACER WIRE ACCESS BOX INSTALLATION NON VALVE LOCATIONS

TRACER WIRE INSTALLATION

NOTES:

1. TRACER WIRE SHALL BE TIED INTO EVERY VALVE, BLOW-OFF, ARV, AND OTHER DEVICES OR CHANGES IN DIRECTION. PROVIDE ONE TRACER WIRE TEST STATION AT MINIMUM INTERVALS AS PRESCRIBED IN AMERICAN WATER'S DESIGN GUIDE.
2. TRACER LEADS SHALL BE INSTALLED IN APPROVED CURB BOXES OR TRACER WIRE ACCESS BOXES. ACCESS BOX STYLE (LIGHT DUTY, DRIVEWAY, OR ROADWAY) SHALL BE DETERMINED BY BOX LOCATION.
3. CURB BOXES SHALL BE INSTALLED FLUSH WITH GROUND AND LOCATED OVER PIPE LINE TO WHICH TRACER LEAD IS ATTACHED.
4. TRACER LEADS SHALL HAVE ADEQUATE SLACK THROUGHOUT THE INSTALLATION TO REDUCE BREAKAGE FROM PULLING.
5. TRACER WIRE THAT EXTENDS A MIN OF 2' ABOVE GRADE SHALL BE COILED IN THE VALVE BOX AND WIRES SHALL BE PROPERLY CONNECT TO THE VALVE BOX PER MANUFACTURERS SPECIFICATIONS. ALL TRACER WIRES SHALL BE OF #12 TW SOLID COPPER WIRE.
6. EARTH AROUND VALVE BOXES SHALL BE THOROUGHLY COMPACTED AT THE TIME OF INSTALLATION. SUBCONTRACTOR SHALL MAKE ADJUSTMENTS FOR FINAL GRADING, SODDING, PAVING, AND RESTORATION AT THE COMPLETION OF EACH PROJECT. SUBCONTRACTOR SHALL PROTECT THE LEADS, BOXES, AND ALL TRACER WIRES THROUGHOUT THE PROJECT. SUBCONTRACTOR SHALL BE RESPONSIBLE FOR ALL WATER AND WASTEWATER UTILITY LOCATIONS THROUGHOUT THE PROJECT AND UNITL APPROVED AND ACCEPTED BY AMERICAN WATER.
7. PROVIDE ONE TRACER LEAD IN EACH DIRECTION UNLESS OTHERWISE NOTED.
8. CONTRACTOR SHALL CONFIRM THE REQUIREMENT FOR CONCRETE COLLARS WITH AW PRIOR TO CONSTRUCTION.

REVISIONS
1/12 – MSG EDITS
6/13 – MSG EDITS
7/14 – MSG EDITS
1/16 – MSG EDITS

AMERICAN WATER MILITARY SERVICES GROU
TRACER WIRE INSTALLATION DETAIL

AMERICAN WATER MILITARY SERVICES GROUP MT LAUREL, NJ 08054

AMERICAN WATER M.S.G. 220 FELLOWSHIP ROAD MT LAUREL, NJ 08054 — AMERICAN WATER

DRAWN BY J. ABRERA | PROJECT ENG'R J. DENISSO APPROVED | DATE 05-03-2010 PROJECT N/A | USE DIMENSIONS ONLY SCALE N.T.S.

USE APPROVED DRAWINGS ONLY FOR CONSTRUCTION PURPOSES | AW MSG-W-05

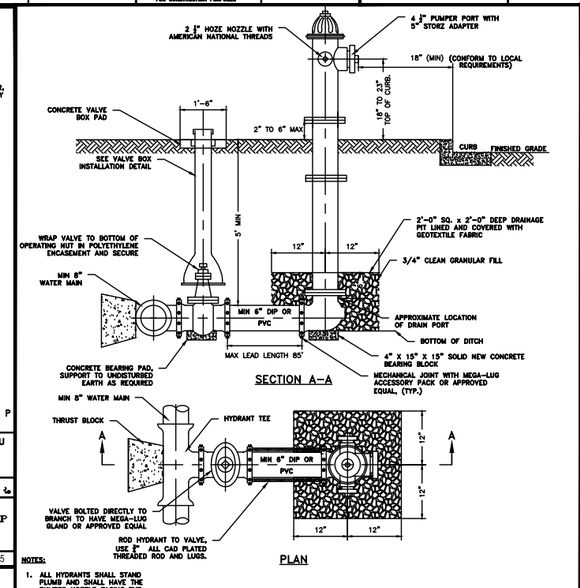

NOTES:

1. ALL HYDRANTS SHALL STAND PLUMB AND SHALL HAVE THE PUMPER NOZZLE FACING THE CURB.
2. HYDRANT BONNETS SHALL BE PAINTED TO INDICATE AVAILABLE FIRE FLOW IN ACCORDANCE WITH AMERICAN WATER SPECIFICATIONS.
3. IF HYDRANT LATERAL IS NOT RESTRAINED, CONTRACTOR SHALL PROVIDE A THRUST BLOCK BEHIND HYDRANT SHOE.
4. RESTRAIN ALL JOINTS ON HYDRANT TEE, HYDRANT VALVE, AND HYDRANT LEAD.
5. AMERICAN WATER RESERVES THE RIGHT TO WAIVE STRICT COMPLIANCE WITH THIS DETAIL IN THE EVENT THAT FIELD CONDITIONS OR O&M WORK REQUIRE A WAIVER.
6. THE DESIGN ENGINEER SHALL DETERMINE IF BOLLARDS ARE REQUIRED

FIRE HYDRANT

REVISIONS

AMERICAN WATER MILITARY SERVICES GROUP
CIVIL
FIRE HYDRANT DETAIL

AMERICAN WATER MILITARY SERVICES GROUP CAMDEN, NJ 08102

AMERICAN WATER M.S.G. 1 WATER STREET CAMDEN, NJ 08102 — AMERICAN WATER

DRAWN BY Z. ALAM | PROJECT ENG'R PDK APPROVED | DATE 05-03-2010 PROJECT N/A | USE DIMENSIONS ONLY SCALE N.T.S.

USE APPROVED DRAWINGS ONLY FOR CONSTRUCTION PURPOSES | AW MSG-W-07

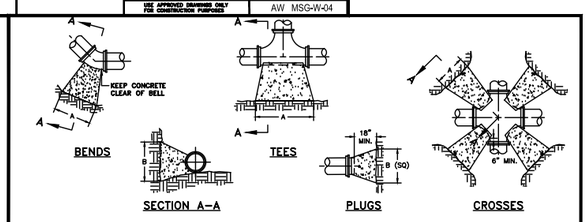

SECTION A–A

REQUIRED BEARING AREA ON UNDISTURBED SOIL AND TYPICAL DIMENSIONS															
SIZE	CROSSES/90° BENDS			45° BENDS			11-1/4° BENDS			22-1/2° BENDS			TEES & PLUGS		
	AREA SQ. FT.	"A"	"B"	AREA SQ. FT.	"A"	"B"	AREA SQ. FT.	"A"	"B"	AREA SQ. FT.	"A"	"B"	AREA SQ. FT.	"A"	"B"
6"	4.0	32"	18"	2.2	18"	16"	0.6	5"	18"	1.1	9"	18"	2.8	23"	18"
8"	7.0	42"	24"	3.8	23"	24"	1.0	6"	24"	2.0	12"	24"	5.0	30"	24"
10"	11.0	53"	30"	6.3	30"	30"	1.6	8"	30"	3.1	15"	30"	8.0	38"	30"
12"	15.1	64"	36"	10.0	40"	36"	2.2	9"	36"	4.4	18"	36"	11.3	45"	36"
14"	21.6	74"	42"	12.5	43"	42"	3.0	10"	42"	6.0	21"	42"	15.5	53"	42"
16"	28.3	85"	48"	17.7	53"	48"	4.0	12"	48"	7.7	23"	48"	20.1	60"	48"

* SURFACE AREA OF BEARING SOIL IS PROVIDED FOR 200 PSI MAXIMUM PRESSURE (INCLUDING SURGE) AND 2000 PSF SOIL BEARING. IF PRESSURE IS HIGHER OR SOIL BEARING IS POTENTIALLY LOWER, CONSULT THE ENGINEER FOR ADJUSTMENTS.

NOTES:

1. COVER OVER TOP OF PIPE SHALL BE BELOW THE FROST LINE OR 30" MINIMUM, 72" MAXIMUM ACCORDING TO REGULATORY REQUIREMENTS. IF GRADING PLANS RECEIVED BY THE ENGINEER/OWNER WITH THE REQUEST FOR WATER MAIN LAYOUT INDICATE ADJUSTMENTS TO EXISTING GRADE, THEN PIPE SHALL BE INSTALLED TO MEET MINIMUM AND MAXIMUM COVER FROM PROPOSED GRADES SHOWN ON THE SAID PLANS.
2. THRUST BLOCKS SHALL BE BUILT AGAINST UNDISTURBED SOIL WITH ADEQUATE BACKING TO PREVENT MOVEMENT OF FITTING.
3. NO THRUST BLOCKS TO BE PLACED IN SEWER LATERAL DITCHES.
4. THRUST BLOCKING MUST FIT WITHIN THE EASEMENT.
5. IN SOME CASES, ADDITIONAL RESTRAINT MAY BE REQUIRED BASED ON 150 PSI STATIC PRESSURE, PLUS 50 PSI WATER HAMMER AND 2000 PSF SOIL BEARING.
6. POLYETHYLENE ENCEMENT IS REQUIRED ON ALL D.I. PIPE AND FITTINGS.
7. THRUST BLOCKING SHALL BE PERFORMED SUCH THAT PIPE JOINTS AND BOLTS ARE ACCESSIBLE.
8. SUFFICIENT CLEARANCE SHALL BE ALLOWED BETWEEN CONCRETE AND BOLTS FOR FUTURE MAINTENANCE.
9. ALL ANCHOR BOLTS SHALL BE STAINLESS STEEL, MINIMUM 3/4" DIAMETER.
10. ALL M.J. AND FLG. FITTINGS TO RECEIVE THRUST BLOCKS SHALL BE WRAPPED IN POLYWRAP. CONTRACTOR SHALL ENSURE THAT POLYWRAP EXTENDS FAR ENOUGH BEYOND THE FITTING TO ENCLOSE ALL BOLTS WITHIN THE POLYWRAP.
11. THRUST BLOCKING DETAILS ARE SHOWN HERE FOR TYPICAL INSTALLATIONS. IN SOME CASES, ADDITIONAL RESTRAINT MAY BE REQUIRED.
12. PORTLAND CEMENT CONCRETE USED FOR THRUST BLOCKS SHALL BE MIN 3000 PSI CONCRETE.
13. FOR UNSTABLE SOIL CONDITIONS, CHECK WITH ENGINEER FOR THRUST BLOCK DIMENSIONS.
14. FOR MAIN SIZES GREATER THAN 16", SEE ENGINEER FOR THRUST BLOCK DIMENSIONS.

THRUST BLOCK DETAIL

REVISIONS
1/16 – MSG EDITS

AMERICAN WATER MILITARY SERVICES GROUP
CIVIL
THRUST BLOCK DETAILS

AMERICAN WATER MILITARY SERVICES GROUP CAMDEN, NJ 08102

AMERICAN WATER M.S.G. 1 WATER STREET CAMDEN, NJ 08102 — AMERICAN WATER

DRAWN BY Z. ALAM | PROJECT ENG'R PDK APPROVED | DATE 05-03-2010 PROJECT N/A | USE DIMENSIONS ONLY SCALE N.T.S.

USE APPROVED DRAWINGS ONLY FOR CONSTRUCTION PURPOSES | AW MSG-W-08

AMERICAN WATER
Military Services
Joint Base Lewis-McChord

BOWEN COLLINS & ASSOCIATES

90% REVIEW

NOT FOR CONSTRUCTION
FOR REVIEW ONLY

NO.	DATE	REV. BY	DESCRIPTION

REVISIONS

AMERICAN WATER (P4-A60MWA2-00002)
WELL 13 REPLACEMENT
FOR AMERICAN WATER MILITARY SERVICES

VERIFY SCALE
BAR IS ONE INCH ON ORIGINAL DRAWING

REVIEW
CHECKED R. ROCHA
APPROVED J. OLDHAM

DESIGN
DESIGN STD
DRAWN STD

GENERAL
AMERICAN WATER STANDARD DETAILS

PROJECT NUMBER 427-22-02
DATE: MAY 2023

DRAWING NO.
C-08

SHEET 13 OF 60

P:\American Water\427-22-01, 02, 03 JBLM Wells\2.0 Design Phase\2.9 Drawings\sht\Well 13\427202_C-08.dwg Plotted: 12/26/2023 2:20 PM By: Rodolfo Garcia

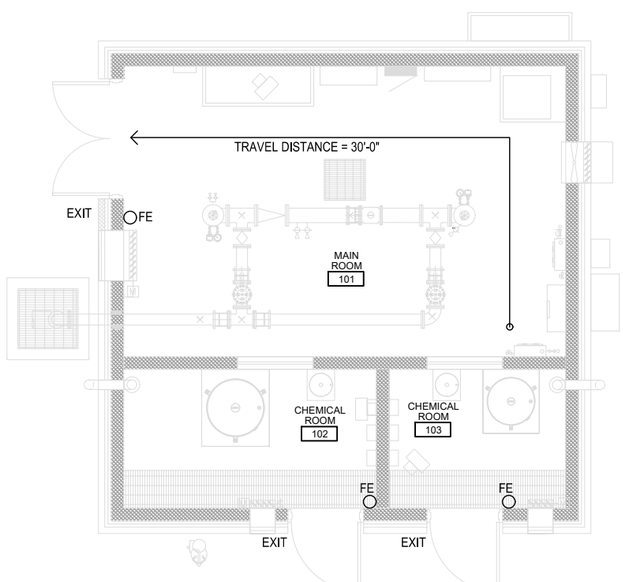

N

CODE PLAN
SCALE: 1/4" = 1'-0"

0 2' 4' 8'

1
A-01

CODE ANALYSIS 2021 IBC

OCCUPANCY: F-1 WITH ACCESSORY STORAGE	STORIES: 1	CONSTRUCTION TYPE: V-B	NON-SPRINKLERED

BUILDING DESCRIPTION
THE WELL BUILDING IS AN UNOCCUPIED EQUIPMENT BUILDING USED TO STORE PUMPS, SUPPORTING EQUIPMENT, AND CHEMICALS FOR WATER TREATMENT.

CODE REVIEW INFORMATION
APPLICABLE CODES, INCLUDE BUT ARE NOT LIMITED TO:

2021 INTERNATIONAL BUILDING CODE
2021 INTERNATIONAL FUEL GAS CODE
2021 INTERNATIONAL MECHANICAL CODE
2021 UNIFORM PLUMBING CODE
2021 INTERNATIONAL ENERGY CONSERVATION CODE
2021 INTERNATIONAL FIRE CODE
2020 NATIONAL ELECTRICAL CODE
2024 NFPA 101, LIFE SAFETY CODE
ARCHITECTURAL BARRIERS ACT (ABA)
2010 ADAAG

GROSS BUILDING SQUARE FEET: 676 SF

PER SECTION 311.1.1 - ACCESSORY STORAGE SPACES
1. A ROOM OR SPACE USED FOR STORAGE PURPOSES THAT IS ACCESSORY TO ANOTHER OCCUPANCY SHALL BE CLASSIFIED AS PART OF THAT OCCUPANCY.

PER SECTION 414.2. CONTROL AREA
1. THE INTENT IS TO CONSIDER THE ENTIRE BUILDING AS A SINGLE CONTROL AREA FOR STORING HAZARDOUS MATERIALS IN A CLOSED-USE SYSTEM. THE HAZARDOUS MATERIAL QUANTITIES WILL NOT EXCEED THAN THE MAXIMUM QUANTITIES ALLOWED PER TABLES 307.1(1), 307.1(2) AND 414.2.2 FOR ONE STORY ABOVE GRADE.

PER TABLE 504.3 - ALLOWABLE BUILDING HEIGHT IN FEET ABOVE GRADE PLANE
ALLOWABLE BUILDING HEIGHT: 40' (15'-3" T.O. ROOF - COMPLIES)

PER TABLE 504.4 - ALLOWABLE NUMBER OF STORIES ABOVE GRADE PLANE
ALLOWABLE STORIES: 1 (1 STORY- COMPLIES)

PER TABLE 506.2 - ALLOWABLE BUILDING AREA
ALLOWABLE AREA F-1: 8,500 SF PER STORY (ACTUAL AREA = 676 SF - COMPLIES)

PER SECTION 508.2.4 - SEPARATION OF OCCUPANCIES
NO SEPARATION IS REQUIRED BETWEEN ACCESSORY OCCUPANCIES AND THE MAIN OCCUPANCY. (NOT REQUIRED, SEE SECTION 414.2.1 FOR CONTROL AREA SEPARATION REQUIREMENTS)

PER SECTION 602 - CONSTRUCTION CLASSIFICATION
TABLE 601 - TYPE V-B

BUILDING ELEMENT	HOURS
PRIMARY STRUCTURAL FRAME	0
BEARING WALLS (INT/EXT)	0
NON-BEARING INT WALLS	0
FLOOR CONSTRUCTION	0
ROOF CONSTRUCTION	0

PER SECTION 903.2.4 - F-1 GROUP
AN AUTOMATIC SPRINKLER SYSTEM SHALL BE PROVIDED THROUGHOUT ALL BUILDINGS CONTAINING A GROUP F-1 OCCUPANCY WHERE ONE OF THE FOLLOWING CONDITIONS EXISTS:
1. FIRE AREA EXCEEDS 12,000 SF (676 SF < 12000 SF - NOT REQUIRED)

PER TABLE 1004.5 - OCCUPANT LOAD FACTOR PER OCCUPANT
ACCESSORY STORAGE AREAS, MECHANICAL EQUIPMENT ROOM - 300 GROSS
TOTAL OCCUPANT LOAD = 676 SF / 300 = 3 OCCUPANTS

PER SECTION 1005 - MEANS OF EGRESS SIZING
1005.3.2 - OTHER EGRESS COMPONENTS
(3 OCCUPANTS) X (0.2") = 0.6" (REQUIRED); 152" (PROVIDED - COMPLIES) 3 EXITS PROVIDED

PER TABLE 1006.2.1 - SPACES WITH ONE EXIT OR EXIT ACCESS DOORWAY
F OCCUPANCY: 49 MAX. OCCS.; OL ≤ 30 = 75' MAX. COMMON PATH OF EGRESS TRAVEL DISTANCE

PER TABLE 1017.2 - EXIT ACCESS TRAVEL DISTANCE = F-1 = 200' MAX.

PER SECTION 1505 - FIRE CLASSIFICATION
TABLE 1505.1 - MIN. ROOF COVERING CLASSIFICATION FOR TYPES OF CONSTRUCTION
ROOF COVERING CLASSIFICATION: C

PER SECTION 2902.1 MINIMUM NUMBER OF PLUMBING FIXTURES.
PLUMBING FIXTURES NEED NOT BE PROVIDED FOR UNOCCUPIED BUILDINGS. THE BUILDING USE IS AN UNOCCUPIED EQUIPMENT BUILDING, NO PLUMBING FIXTURES ARE REQUIRED.

CODE PLAN LEGEND

NAME 101 — NON-SPRINKLERED
— COMMON PATH OF TRAVEL DISTANCE TO EXIT
FE — FIRE EXTINGUISHER ON BRACKET

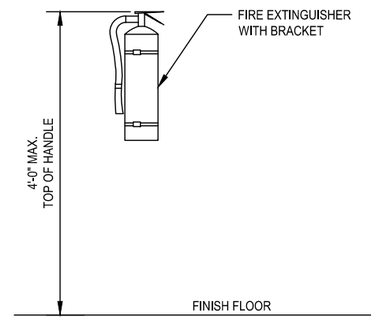

FIRE EXTINGUISHER DETAIL
SCALE: 1" = 1'-0"

2
A-01

CODE ANALYSIS NFPA 101

OCCUPANCY: NEW INDUSTRIAL	STORIES: 1	CONSTRUCTION TYPE: V-000	NON-SPRINKLERED

PER 6.12.1 - INDUSTRIAL
PER 6.2.2.3 - CLASSIFICATION OF HAZARD CONTENT - ORDINARY
PER 40.1.2.1.2 - SPECIAL-PURPOSE INDUSTRIAL OCCUPANCY SHALL INCLUDE ALL OF THE FOLLOWING:
1.INDUSTRIAL OCCUPANCIES THAT CONDUCT ORDINARY OR LOW HAZARD INDUSTRIAL OPERATIONS IN BUILDINGS INBUILDINGS OF CONVENTIONAL DESIGN THAT ARE USABLE FOR VARIOUS TYPES OF INDUSTRIAL PROCESSES.

PER 40.1.6 - MINIMUM CONSTRUCTION REQUIREMENTS (NO REQUIREMENTS)
PER 40.2.5.1 - ARRANGEMENT OF MEANS OF EGRESS:
DEAD-END CORRIDOR = 50'
COMMON PATH OF TRAVEL (NON-SPRINKLERED) = 50'

PER 40.2.6.1 - MAXIMUM TRAVEL DISTANCE TO EXITS (NON-SPRINKLERED) = 300'
PER NFPA 220, TABLE 4.1.1 - V-000

BUILDING ELEMENT	HOURS
PRIMARY STRUCTURAL FRAME	0
BEARING WALLS (INT/EXT)	0
NON-BEARING INT WALLS	0
FLOOR CONSTRUCTION	0
ROOF CONSTRUCTION	0

AMERICAN WATER
Military Services
Joint Base Lewis-McChord

BOWEN COLLINS & ASSOCIATES

Cushing Terrell
cushingterrell.com
800.757.9522

90% REVIEW

NOT FOR CONSTRUCTION
FOR REVIEW ONLY

REVISIONS

NO.	DATE	REV. BY	DESCRIPTION

AMERICAN WATER
WELL 13 REPLACEMENT
JBLM WASHINGTON

VERIFY SCALE
BAR IS ONE INCH ON ORIGINAL DRAWING

REVIEW
CHECKED SR
APPROVED SR

DESIGN
DESIGN AR
DRAWN AR

ARCHITECTURAL
CODE PLAN

PROJECT NUMBER 427-22-03
DATE: DECEMBER 2023

DRAWING NO.
A-01
SHEET 14 OF 60

L:\BCA_JBLMISDC-BIMCAD\Arch\Well 13\4272202_Well_13_A_01.dwg Plotted: 12/22/2023 1:59 PM By: Alfonso Ramirez

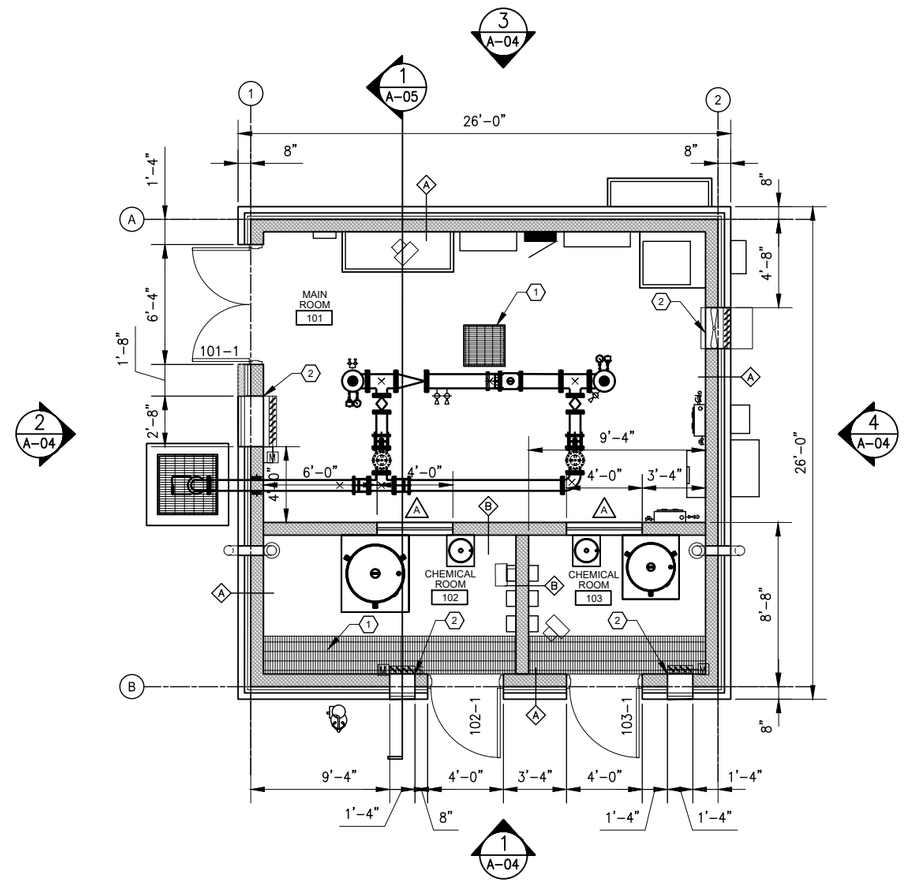

N

FLOOR PLAN

SCALE: 1/4" = 1'-0"

GENERAL NOTES

A. SEE CIVIL, STRUCTURAL, MECHANICAL, PLUMBING AND ELECTRICAL DRAWINGS FOR ADDITIONAL REQUIREMENTS.

B. SEE SHEET A-06 FOR DOOR AND HARDWARE INFORMATION.

C. COORDINATE ALL PENETRATIONS WITH RESPECTIVE TRADES WHICH INCLUDE SLABS, WALLS AND ROOF.

PLAN LEGEND

- ASSEMBLY TYPE (SEE ASSEMBLIES SHEET)
- XX — ASSEMBLY MODIFIER, PER TYPE
- NAME 101 — ROOM NAME AND NUMBER
- WINDOW TYPE (SEE A-06)
- KEYNOTE
- SIM — DIRECTION OF VIEW, IF APPLICABLE
- 1 XXX000 — DRAWING NUMBER / SHEET WHERE DRAWN
- 101-1 — DOOR NUMBER (SEE SHEET A-05)
- DIMENSION TO FACE OF MATERIAL

WALL TYPE LEGEND

SCALE: 1" = 1'-0"

GENERAL WALL TYPE NOTES:

A. PROVIDE BLOCKING AS REQUIRED TO SECURE WALL HUNG COMPONENTS.

KEYNOTES:

1. NOT USED.

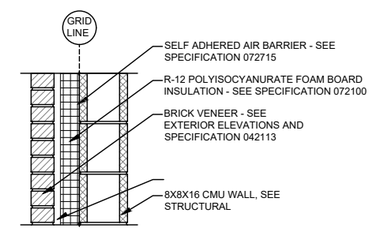

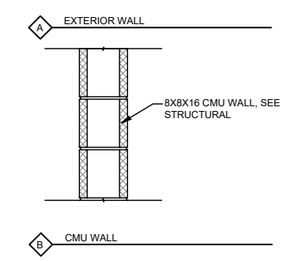

KEYNOTES

1 FLOOR DRAIN, SEE PLUMBING AND STRUCTURAL

2. WALL LOUVER, COORDINATE WITH MECHANICAL

AMERICAN WATER
Military Services
Joint Base Lewis-McChord

Cushing Terrell
cushingterrell.com
800.757.9532

BOWEN COLLINS & ASSOCIATES

90% REVIEW

NOT FOR CONSTRUCTION
FOR REVIEW ONLY

NO.	DATE	REV. BY	DESCRIPTION

REVISIONS

VERIFY SCALE
BAR IS ONE INCH ON ORIGINAL DRAWING

AMERICAN WATER
WELL 13 REPLACEMENT
JBLM WASHINGTON

REVIEW
CHECKED SR
APPROVED SR

DESIGN
DESIGN AR
DRAWN AR

ARCHITECTURAL
FLOOR PLAN

PROJECT NUMBER 427-22-03
DATE: DECEMBER 2023

DRAWING NO.
A-02

SHEET 15 OF 60

L:\BCA_JBLMISDC-BIMCAD\Arch\Well 13\4272202_Well_13_A_02.dwg Plotted: 12/22/2023 2:34 PM By: Alfonso Ramirez

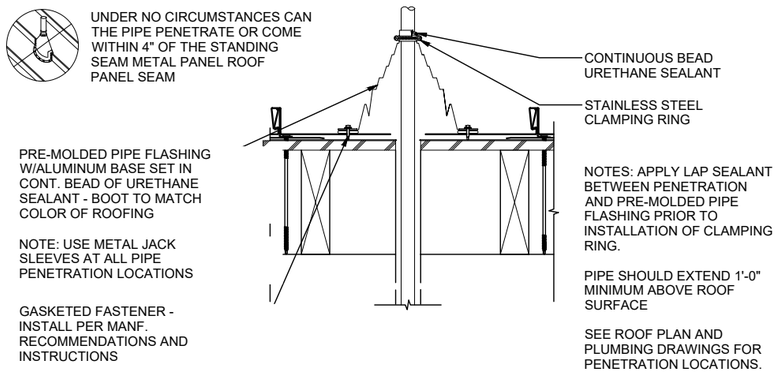

TYPICAL VENT PENETRATION DETAIL

SCALE: 3" = 1'-0"

2 / A-03

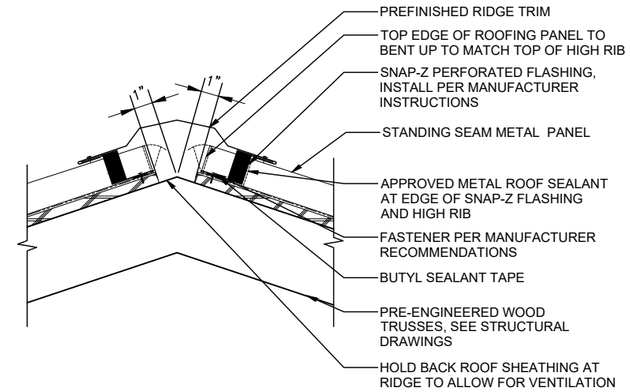

TYPICAL RIDGE VENT DETAIL

SCALE: 3" = 1'-0"

3 / A-03

GENERAL NOTES

A. SEE STRUCTURAL DRAWINGS FOR ROOF MEMBERS DIMENSIONS AND LOCATIONS.

B. COORDINATE WITH MECHANICAL, PLUMBING AND ELECTRICAL DRAWINGS FOR ADDITIONAL ROOF PENETRATIONS INFORMATION .

PLAN LEGEND

- KEYNOTE
- DIRECTION OF VIEW, IF APPLICABLE (SIM)
- DRAWING NUMBER (1) / SHEET WHERE DRAWN (XXX00)
- DIMENSION TO FACE OF FRAMING

MATERIAL LEGEND

STANDING SEAM METAL PANEL AEP SPAN - COOL WEATHERED COPPER

KEYNOTES

1. OUTLINE OF WALL BELOW, SEE FLOOR PLAN FOR WALL LOCATIONS, SEE STRUCTURAL FRAMING PLAN FOR OVERHANG FRAMING MEMBERS DIMENSIONS.
2. METAL GUTTERS AND DOWNSPOUT, SEE 4/A-03
3. RIDGE CAP, SEE DETAIL 3/A03

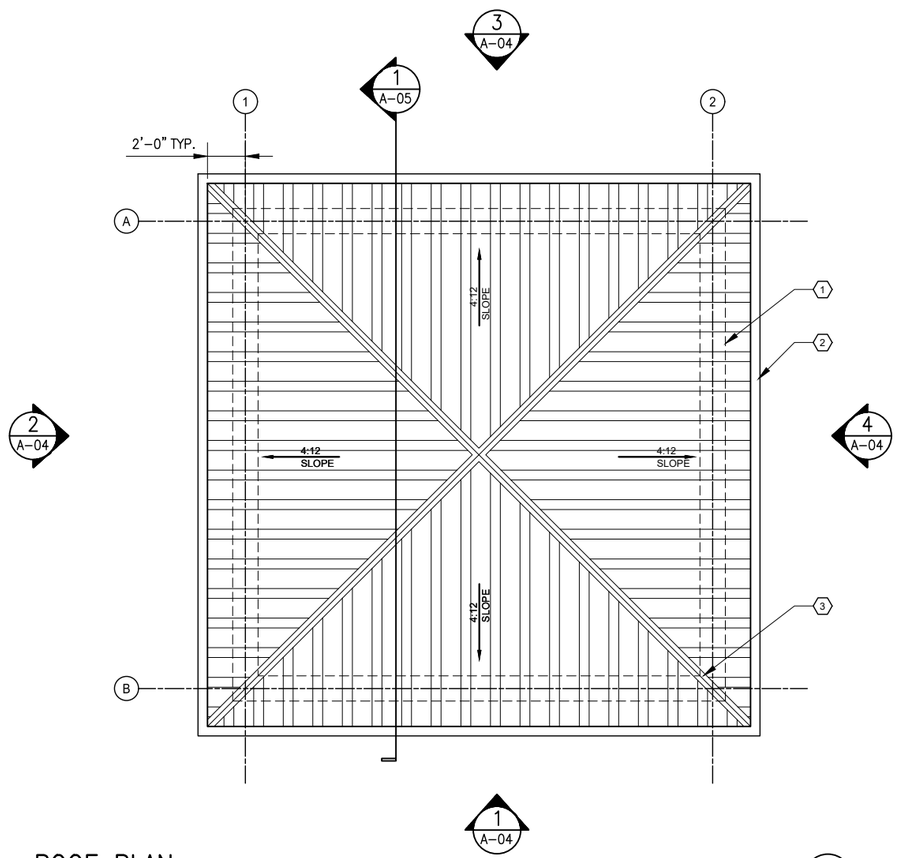

ROOF PLAN

SCALE: 1/4" = 1'-0"

1 / A-03

ROOF TYPE DETAIL

SCALE: 1" = 1'-0"

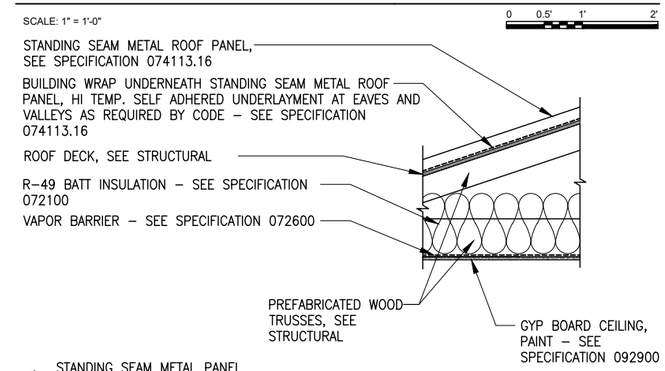

R1 STANDING SEAM METAL PANEL ROOF ASSEMBLY

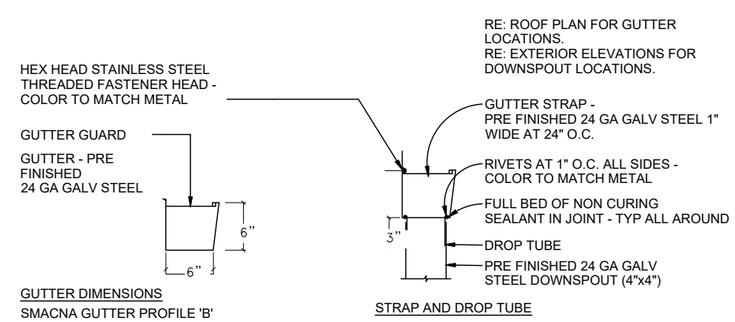

GUTTER DIMENSIONS

SMACNA GUTTER PROFILE 'B'

STRAP AND DROP TUBE

GUTTER DIMENSIONS / STRAP AND DROP TUBE

SCALE: 1 1/2" = 1'-0"

4 / A-03

AMERICAN WATER Military Services

Joint Base Lewis-McChord

BOWEN COLLINS & ASSOCIATES

Cushing Terrell cushingterrell.com 800.757.9532

90% REVIEW

NOT FOR CONSTRUCTION FOR REVIEW ONLY

NO.	DATE	REV. BY	DESCRIPTION

REVISIONS

VERIFY SCALE

BAR IS ONE INCH ON ORIGINAL DRAWING

AMERICAN WATER

WELL 13 REPLACEMENT

JBLM WASHINGTON

REVIEW

CHECKED SR

APPROVED SR

DESIGN

DESIGN AR

DRAWN AR

ARCHITECTURAL

ROOF PLAN AND DETAILS

PROJECT NUMBER 427-22-03

DATE: DECEMBER 2023

DRAWING NO. A-03

SHEET 16 OF 60

L:\BCA_JBLMISDC\BIMCAD\Arch\Well 13\4272202_Well_13_A_03.dwg Plotted: 12/22/2023 2:06 PM By: Alfonso Ramirez

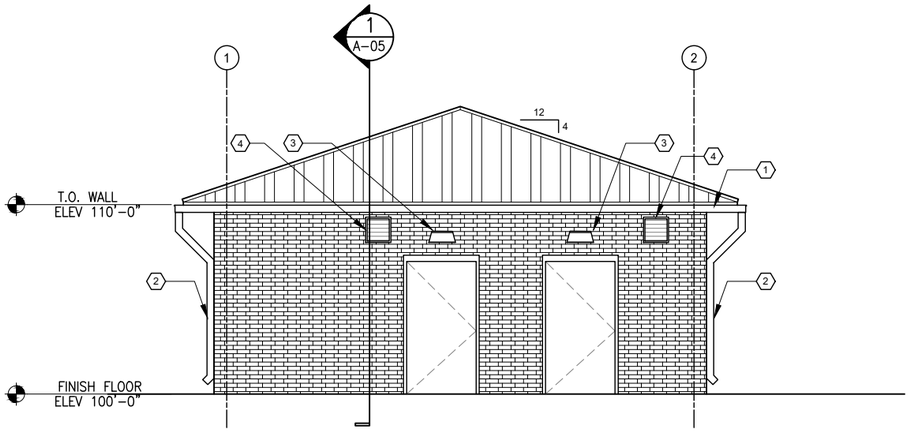

SOUTH ELEVATION

SCALE: 1/4" = 1'-0"

0 2' 4' 8'

1 / A-04

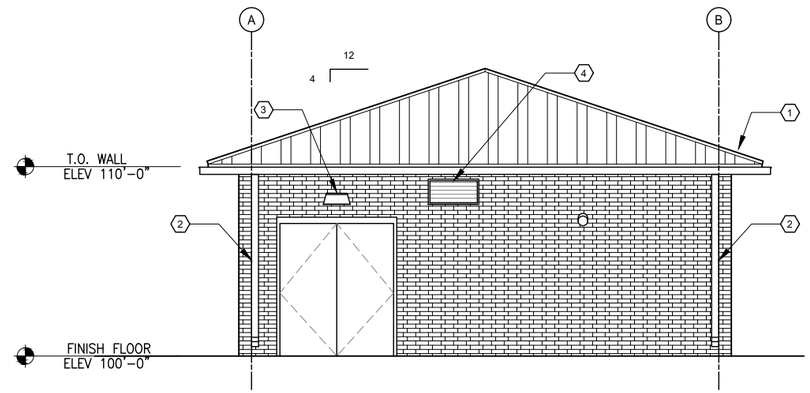

WEST ELEVATION

SCALE: 1/4" = 1'-0"

0 2' 4' 8'

2 / A-04

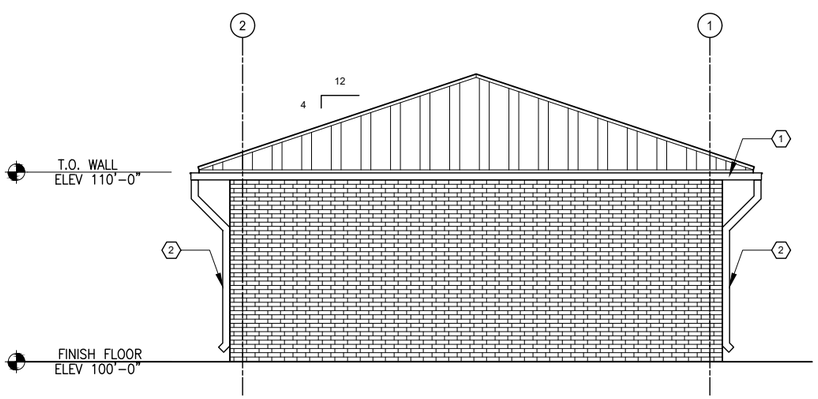

NORTH ELEVATION

SCALE: 1/4" = 1'-0"

0 2' 4' 8'

3 / A-04

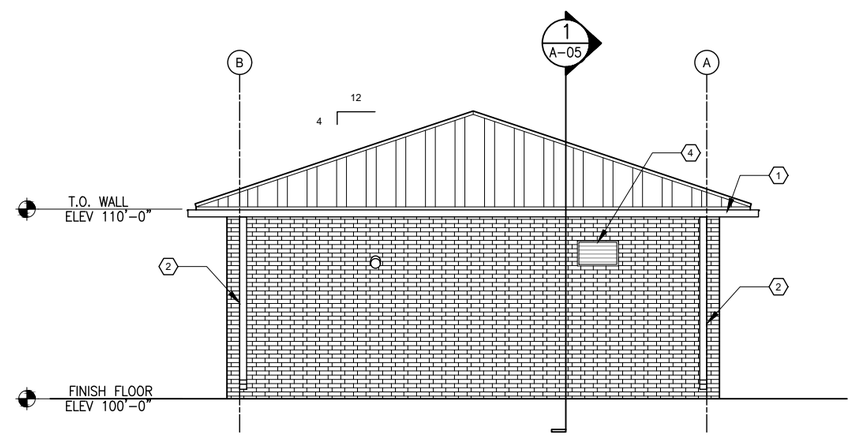

EAST ELEVATION

SCALE: 1/4" = 1'-0"

0 2' 4' 8'

4 / A-04

GENERAL NOTES

A. SEE CIVIL, STRUCTURAL, MECHANICAL, PLUMBING AND ELECTRICAL DRAWINGS FOR ADDITIONAL REQUIREMENTS.

B. COORDINATE ALL PENETRATIONS WITH RESPECTIVE TRADES WHICH INCLUDE SLABS, WALLS AND ROOF.

MATERIAL LEGEND

BRICK VENEER
MUTUAL MATERIALS - CHESTNUT

STANDING SEAM METAL PANEL
AEP SPAN - COOL WEATHERED COPPER

KEYNOTES

1. METAL GUTTER - SEE DETAIL 4/A03.
2. DOWNSPOUT TO DAYLIGHT ON GRADE .
3. LIGHT FIXTURE, SEE ELECTRICAL.
4. LOUVER, SEE 4/A-05 AND MECHANICAL.

AMERICAN WATER
Military Services
Joint Base Lewis-McChord

Cushing Terrell
cushingterrell.com
800.757.9532

BOWEN COLLINS & ASSOCIATES

90% REVIEW

NOT FOR CONSTRUCTION
FOR REVIEW ONLY

REVISIONS

NO.	DATE	REV. BY	DESCRIPTION

AMERICAN WATER
WELL 13 REPLACEMENT
JBLM WASHINGTON

VERIFY SCALE
BAR IS ONE INCH ON ORIGINAL DRAWING

REVIEW
CHECKED SR
APPROVED SR

DESIGN
DESIGN AR
DRAWN AR

ARCHITECTURAL

EXTERIOR ELEVATIONS

PROJECT NUMBER 427-22-03

DATE: DECEMBER 2023

DRAWING NO.
A-04

SHEET 17 OF 60

L:\BCA_JBLM\SDC-BIM\CAD\Arch\Well 13\4272202_Well_13_A_04.dwg Plotted: 12/22/2023 2:08 PM By: Alfonso Ramirez

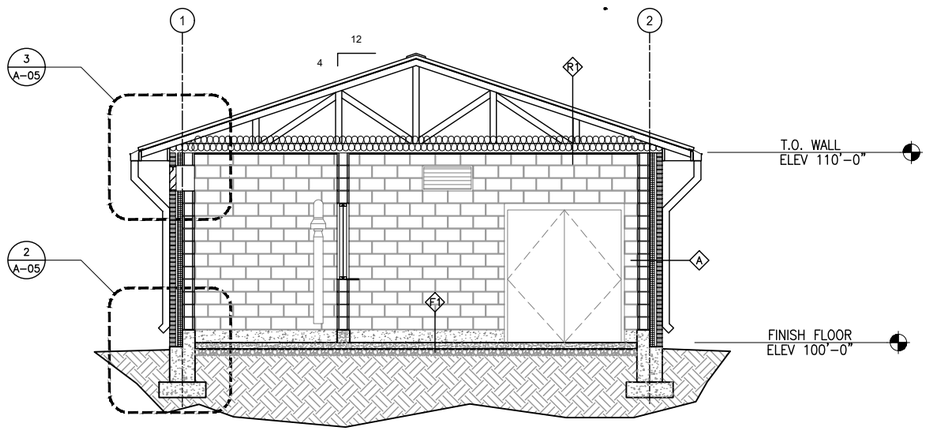

BUILDING SECTION 1

SCALE: 1/4" = 1'-0"

0 2' 4' 8'

1 / A05

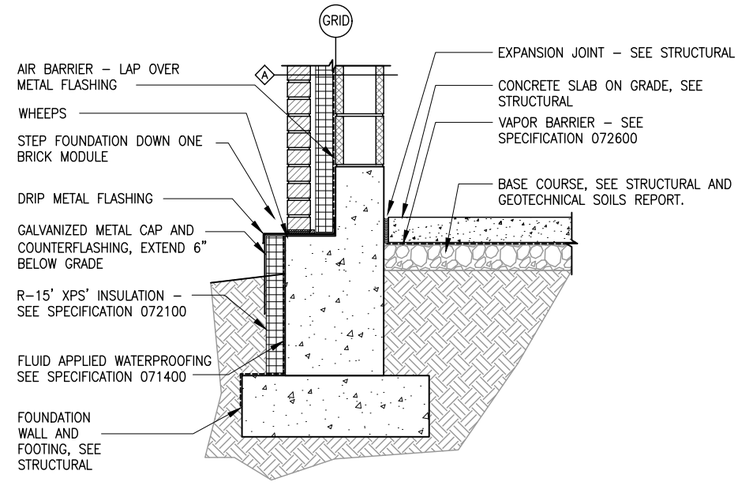

TYPICAL FOUNDATION DETAIL

SCALE: 1" = 1'-0"

0 6" 1' 2'

2 / A-05

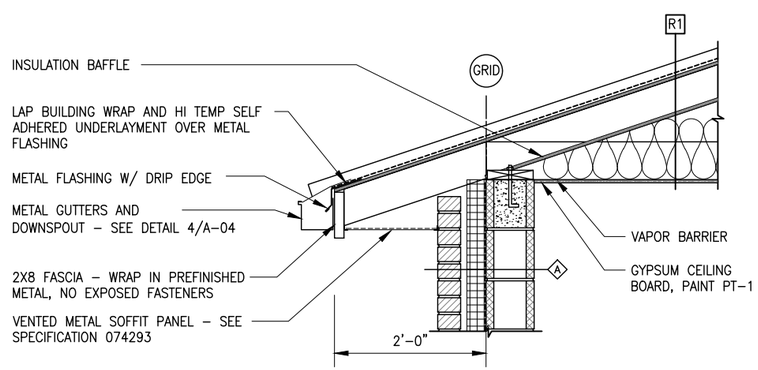

EAVE DETAIL

SCALE: 1" = 1'-0"

0 6" 1' 2'

3 / A-05

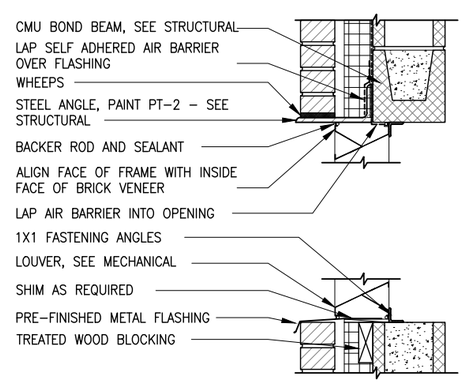

LOUVER HEAD/SILL DETAIL

SCALE: 1 1/2" = 1'-0"

0 6" 1' 2'

4 / A-05

GENERAL NOTES

A. SEE CIVIL, STRUCTURAL, MECHANICAL, PLUMBING AND ELECTRICAL DRAWINGS FOR ADDITIONAL REQUIREMENTS.

B. COORDINATE ALL PENETRATIONS WITH RESPECTIVE TRADES WHICH INCLUDE SLABS, WALLS AND ROOF.

C. SEE STRUCTURAL DRAWINGS FOR SLAB CONSTRUCTION AND DETAILS.

FLOOR TYPE DETAIL

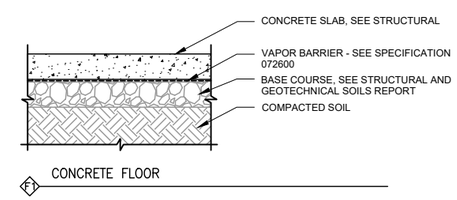

F1 CONCRETE FLOOR

AMERICAN WATER
Military Services
Joint Base Lewis-McChord

Cushing Terrell
cushingterrell.com
800.757.9532

BOWEN COLLINS & ASSOCIATES

90% REVIEW

NOT FOR CONSTRUCTION
FOR REVIEW ONLY

NO.	DATE	REV. BY	DESCRIPTION

REVISIONS

AMERICAN WATER
WELL 13 REPLACEMENT
JBLM WASHINGTON

VERIFY SCALE
BAR IS ONE INCH ON ORIGINAL DRAWING

REVIEW
CHECKED SR
APPROVED SR

DESIGN
DESIGN AR
DRAWN AR

ARCHITECTURAL
BUILDING SECTION & DETAILS

PROJECT NUMBER 427-22-03
DATE: DECEMBER 2023

DRAWING NO.
A-05

SHEET 18 OF 60

L:\BCA_JBLMISDC\BIMCAD\Archi\Well 13\4272202_Well_13_A_05.dwg Plotted: 12/22/2023 2:46 PM By: Alfonso Ramirez

ROOM FINISH SCHEDULE

ROOM NUMBER	ROOM NAME	FLOOR	BASE	WALL				ADDITIONAL NOTES
				NORTH	EAST	SOUTH	WEST	
A101	FILTRATION ROOM	SC	–	–	–	–	–	1
A102	CHLORINE ROOM	SC	–	–	–	–	–	1
A103	ELECT. ROOM	SC	–	–	–	–	–	1

DOOR, FRAME AND HARDWARE SCHEDULE

DOOR NUMBER	ROOM NUMBER	ROOM NAME	DOOR					FRAME		HARDWARE GROUP
			SIZE			MTL	TYPE	MTL	TYPE	
			W	H	T					
101–1	101	MAIN ROOM	6'–0"	7'–0"	1 3/4"	IHM	B	IHM	2	1
102–1	102	CHEMICAL ROOM	3–8"	7'–0"	1 3/4"	IHM	A	IHM	1	2
103–1	103	CHEMICAL ROOM	3'–8"	7'–0"	1 3/4"	IHM	A	IHM	1	2

GENERAL NOTES

A. FIELD VERIFY ALL ROUGH OPENING DIMENSIONS PRIOR TO FABRICATION AND INSTALLATION.

B. FOR FRAME TYPE LOCATIONS, SEE FLOOR PLAN SHEET A-02

C. PAINT ALL HOLLOW METAL DOORS AND FRAMES PER SPECIFICATION DIVISION 9.

ROOM FINISH ABBREVIATIONS

FLOORING

SC# SEALED CONCRETE

PAINT

PT-1 BASIS OF DESIGN SHERWIN WILLIAMS SW CUSTOM, MATCH #8264-10961

PT-2 BASIS OF DESIGN: FEDERAL STANDARD 595B #20062, DARK BROWN

ADDITIONAL NOTES

1. PAINT GYPSUM CEILING BOARD, PT-1

ABBREVIATIONS

IHM – INSULATED HOLLOW METAL

DOOR NOTES

1. PROVIDE LOCKSET PER JBLM STANDARDS FOR EMERGENCY SERVICE ACCESS

HARDWARE GROUPS

SET 1

–LOCKSET (ENTRANCE)
–HINGES
–RIM EXIT DEVICES
–REMOVABLE CENTER MULLION
–SURFACE CLOSER
–WEATHERSTRIP
–THRESHOLD
–SWEEP
–SILENCER
–FLOOR STOP

SET 2

–LOCKSET (ENTRANCE)
–HINGES
–RIM EXIT DEVICE
–SURFACE CLOSER
–WEATHERSTRIP
–THRESHOLD
–SWEEP
–SILENCER
–FLOOR STOP

KEYNOTES

1. REMOVABLE MULLION.
2. PROVIDE HAZARD COMMUNICATION DOOR SIGN ON EXTERIOR SIDE, SEE SPECIFICATION 101423.
3. PAINT HOLLOW METAL DOORS AND FRAME, PT-2
4. PAINT HOLLOW METAL WINDOW OR LOUVER FRAME, PT-2
5. PROVIDE 5/16" CLEAR GLAZING REINFORCED WITH WIRE MESH

HOLLOW METAL DOOR FRAMES

1/4" = 1'-0"

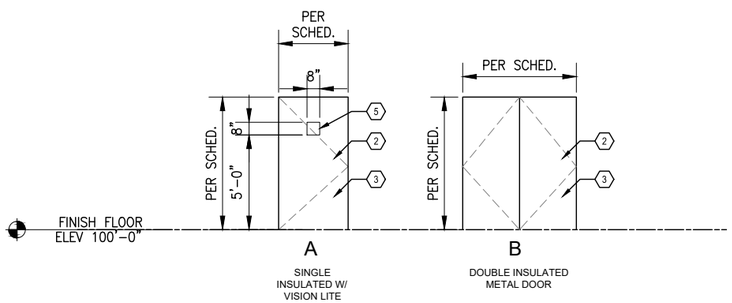

HOLLOW METAL FRAME TYPES

1/4" = 1'-0"

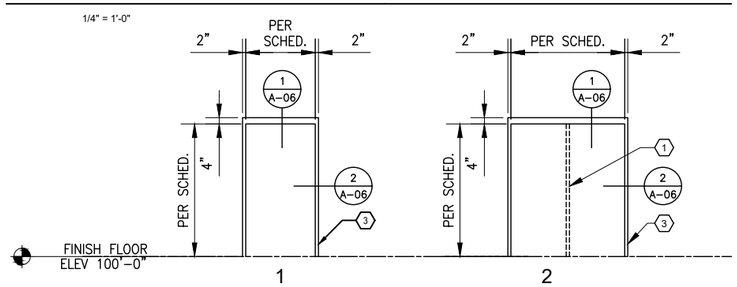

HOLLOW METAL WINDOW TYPES

1/4" = 1'-0"

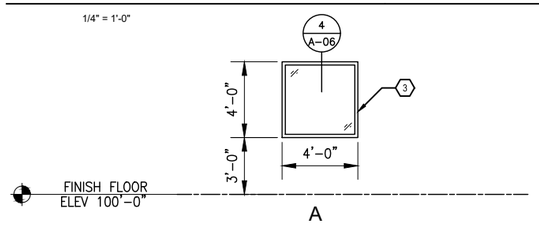

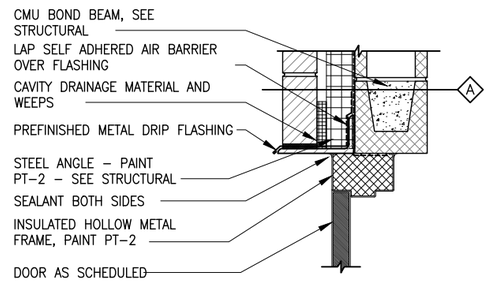

HOLLOW METAL DOOR HEAD

SCALE: 1 1/2" = 1'–0" 0 6" 1' 2'

1 A–06

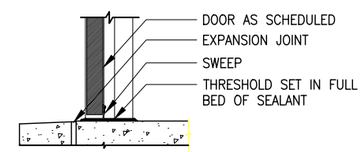

HOLLOW METAL DOOR THRESHOLD

SCALE: 1 1/2" = 1'–0" 0 6" 1' 2'

3 A–06

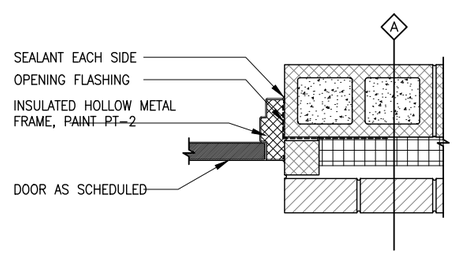

HOLLOW METAL DOOR JAMB

SCALE: 1 1/2" = 1'–0" 0 6" 1' 2'

2 A–06

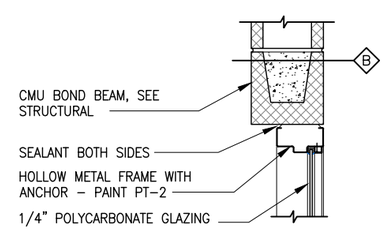

HOLLOW METAL WINDOW HEAD/JAMB

SCALE: 1 1/2" = 1'–0" 0 6" 1' 2'

4 A–06

AMERICAN WATER
Military Services
Joint Base Lewis-McChord

BOWEN COLLINS & ASSOCIATES

Cushing Terrell
cushingterrell.com
800.757.9532

90% REVIEW

NOT FOR CONSTRUCTION
FOR REVIEW ONLY

NO.	DATE	REV. BY	DESCRIPTION

REVISIONS

AMERICAN WATER
WELL 13 REPLACEMENT
JBLM WASHINGTON

VERIFY SCALE
BAR IS ONE INCH ON ORIGINAL DRAWING

REVIEW
CHECKED SR
APPROVED SR

DESIGN
DESIGN AR
DRAWN AR

ARCHITECTURAL
DOORS & WINDOWS

PROJECT NUMBER 427-22-03
DATE: DECEMBER 2023

DRAWING NO.
A-06
SHEET 19 OF 60

L:\BCA_JBLMISDC\BIMCAD\Archi\Well 13\4272202_Well_13_A_06.dwg Plotted: 12/22/2023 2:57 PM By: Alfonso Ramirez

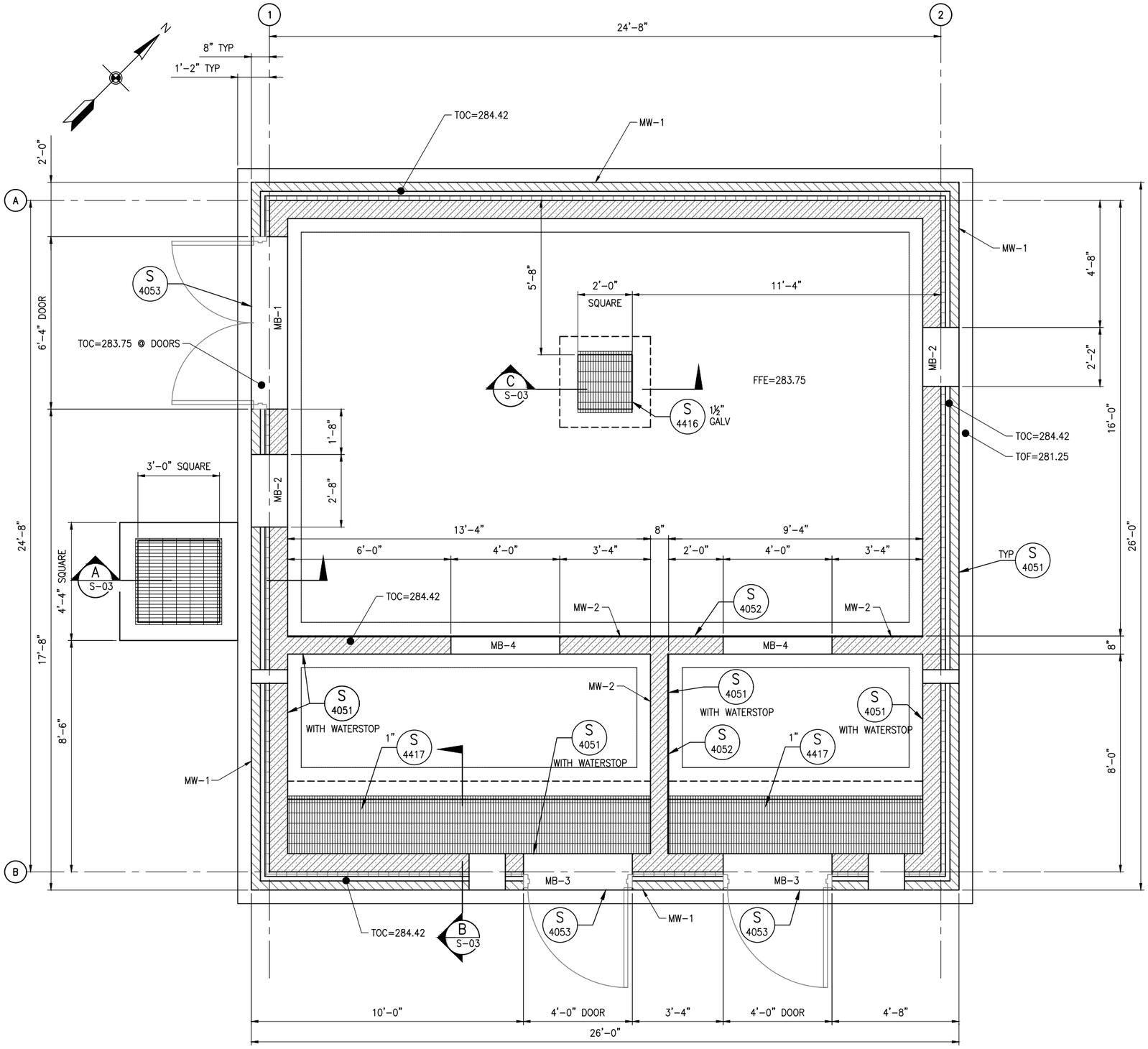

FLOOR PLAN

SCALE: 1/2"=1'-0"

FOOTING AND FOUNDATION NOTES:

1. SEE MECHANICAL DRAWINGS FOR DIMENSIONS NOT SHOW ON STRUCTURAL DRAWINGS.
2. SEE STRUCTURAL NOTES ON GS-01 FOR ADDITIONAL INFORMATION INCLUDING SITE PREPARATION NOTES.
3. FOOTING ELEVATIONS SHOWN ARE BASED ON 2'-6" FROST COVER. COORDINATE ELEVATIONS SHOWN WITH CIVIL AND SITE PLANS FOR ANY ADDITIONAL DEPTH THAT MAY BE REQUIRED TO MAINTAIN MINIMUM FROST COVER OVER FOOTINGS.
4. CENTER FOOTING ON WALLS UNLESS DIMENSIONED OTHERWISE IN DETAILS.
5. SEE PLAN AND DETAILS FOR TOP OF FOUNDATION WALL ELEVATIONS.
6. SLAB ON GRADE SHALL BE 6" CONCRETE OVER 4" FREE-DRAINING GRAVEL, UNLESS NOTED OTHERWISE. REINFORCE SLAB WITH #5@12" OC.
7. SEE DETAILS S/4030 & S/4039 FOR TYPICAL CONCRETE DETAILS.
8. PROVIDE HOUSEKEEPING PADS FOR MECHANICAL AND ELECTRICAL EQUIPMENT PER MECHANICAL AND ELECTRICAL DRAWINGS AND PER EQUIPMENT MANUFACTURER. SEE DETAIL S/4113 FOR TYPICAL CONCRETE PAD DETAILS.
9. FOR MASONRY WALL REINFORCING SEE STRUCTURAL NOTES ON GS-02. SEE SHEET GS-05 FOR TYPICAL MASONRY WALL DETAILS.

LEGEND:
FFE = FINISHED FLOOR ELEVATION
TOC = TOP OF CONCRETE
TOF = TOP OF FOOTING

AMERICAN WATER
Military Services
Joint Base Lewis-McChord

BOWEN COLLINS & ASSOCIATES

90% REVIEW

NOT FOR CONSTRUCTION
FOR REVIEW ONLY

NO.	DATE	REV. BY	DESCRIPTION

REVISIONS

AMERICAN WATER (P4-A60/MWA2-00002)
WELL 13 REPLACEMENT
FOR AMERICAN WATER MILITARY SERVICES

VERIFY SCALE
BAR IS ONE INCH ON ORIGINAL DRAWING

REVIEW
CHECKED
APPROVED S. COHEN

DESIGN
DESIGN S. COHEN
DRAWN P. BAXTER

STRUCTURAL
WELL 13
STRUCTURAL FLOOR PLAN

DATE: DECEMBER 2023
PROJECT NUMBER 427-22-02

DRAWING NO.
S-01

SHEET 20 OF 60

P:\American Water\427-22-01, 02, 03 JBLM Wells\2.0 Design Phase\2.9 Drawings\sht\Well 13\4272202_S-01.dwg Plotted: 12/27/2023 1:02 PM By: Preston Baxter

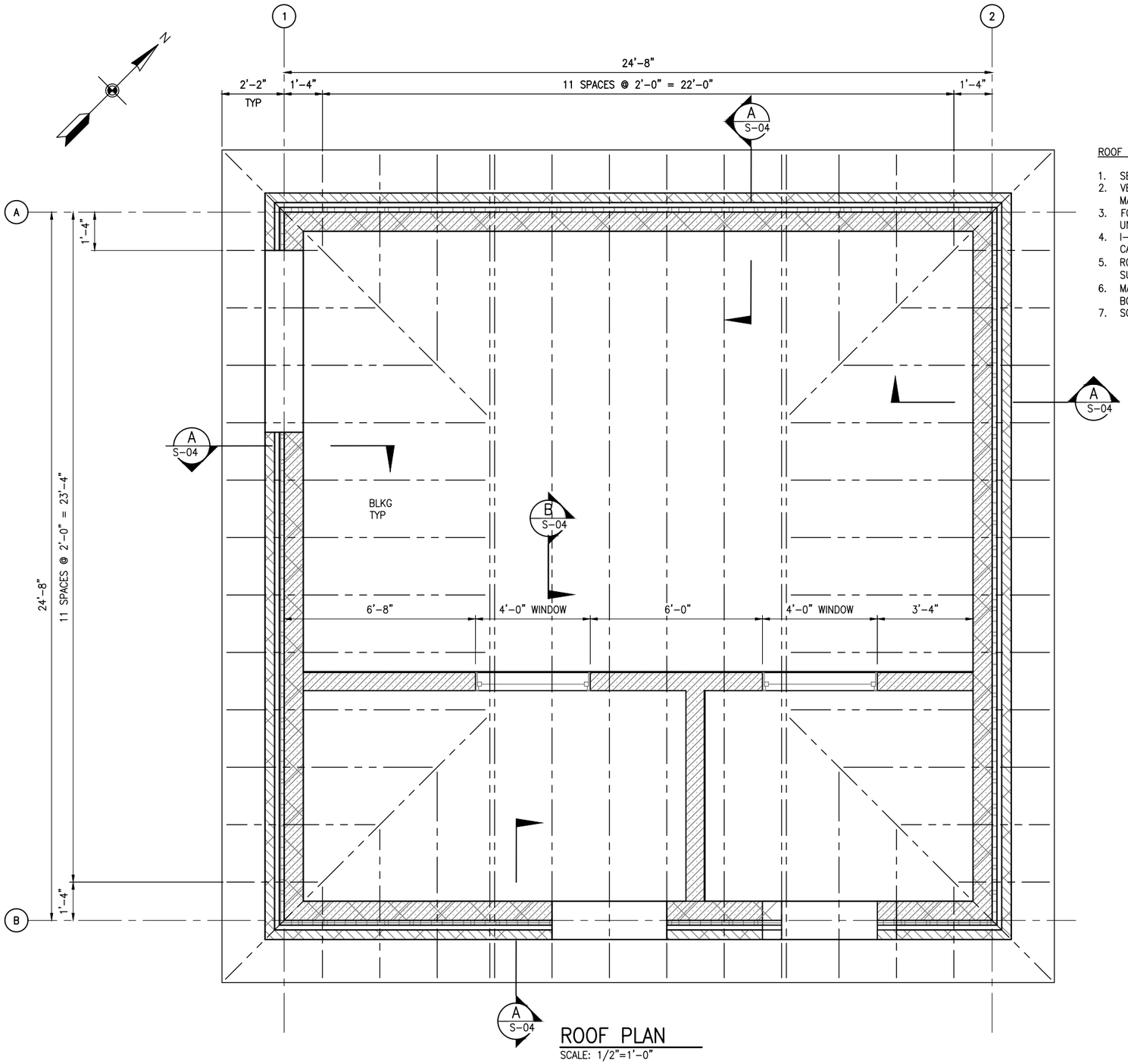

ROOF PLAN
SCALE: 1/2"=1'-0"

ROOF FRAMING PLAN NOTES:

1. SEE STRUCTURAL NOTES ON SHEET GS-01 FOR ADDITIONAL INFORMATION.
2. VERIFY ALL ROUGH OPENING DIMENSIONS WITH MECHANICAL AND ARCHITECTURAL DRAWINGS AND WITH MANUFACTURER'S REQUIREMENTS.
3. FOR TYPICAL MASONRY WALL DETAILS SEE SHEET GS-04. REINFORCE WALL PER STRUCTURAL NOTES ON GS-01 UNLESS NOTED OTHERWISE ON PLANS AND WALL SECTIONS.
4. I-JOIST ARE SPECIFIED AS BOISE CASCADE. ANY SUBSTITUTIONS SHALL MATCH THE RATED CAPACITY OF THE BOISE CASCADE JOISTS.
5. ROOF SHEATHING SHALL BE 19/32" APA RATED WOOD SHEATHING. NAIL WITH 10D COMMON NAILS @ 6" OC AT SUPPORTED EDGES (AND AT BLOCKING) AND AT 12" OC AT INTERMEDIATE FRAME.
6. MASONRY BEAMS (MB) SHALL BE REINFORCED PER MASONRY BEAM SCHEDULE, WITH A MINIMUM OF (2) #5 AT BOTTOM OF BEAMS OVER OPENINGS.
7. SOLARTUBE SKYLIGHTS, SEE ARCHITECTURAL DRAWINGS.

AMERICAN WATER
Military Services
Joint Base Lewis-McChord

BOWEN COLLINS & ASSOCIATES

90% REVIEW

NOT FOR CONSTRUCTION
FOR REVIEW ONLY

NO.	DATE	REV. BY	DESCRIPTION

REVISIONS

AMERICAN WATER (P4-A60MWA2-00002)
WELL 13 REPLACEMENT
FOR AMERICAN WATER MILITARY SERVICES

VERIFY SCALE
BAR IS ONE INCH ON ORIGINAL DRAWING

REVIEW
CHECKED
APPROVED S. COHEN

DESIGN
DESIGN S. COHEN
DRAWN P. BAXTER

STRUCTURAL

WELL 13
STRUCTURAL ROOF PLAN

DATE: DECEMBER 2023
PROJECT NUMBER 427-22-02

DRAWING NO.
S-02

SHEET 21 OF 60

P:\American Water\427-22-01, 02, 03 JBLM Wells\2.0 Design Phase\2.9 Drawings\sht\Well 13\4272202_S-02.dwg Plotted: 12/27/2023 1:03 PM By: Preston Baxter

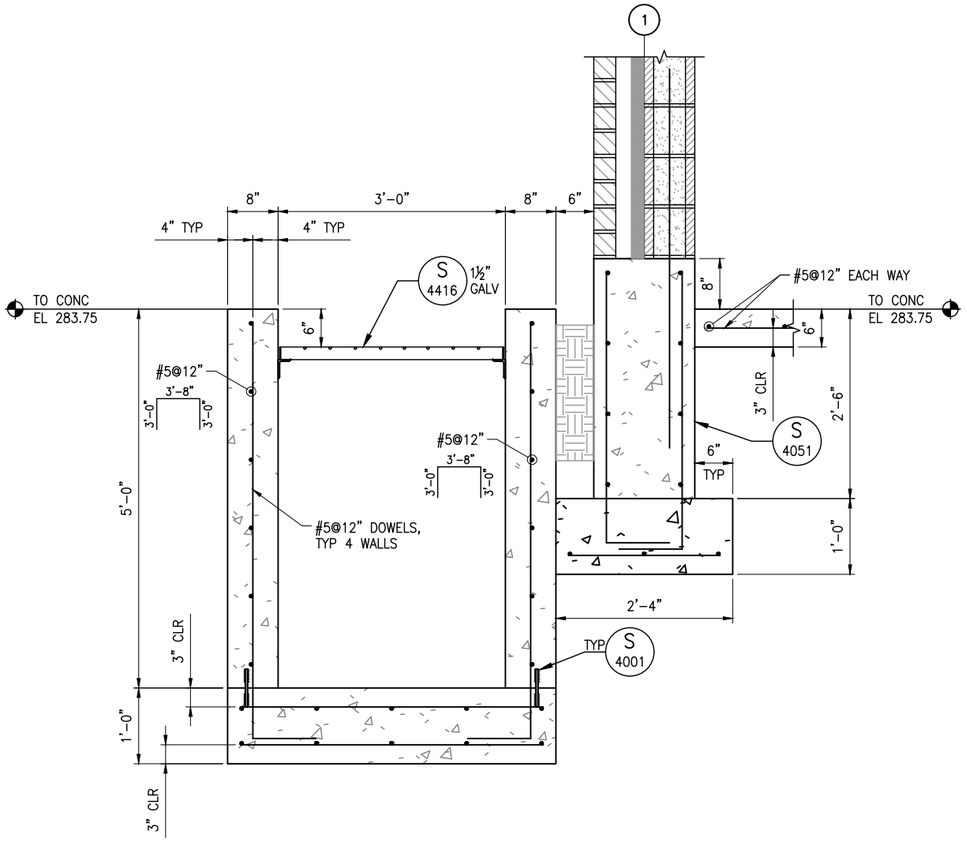

SECTION A

SCALE: 1"=1'-0"

S-01

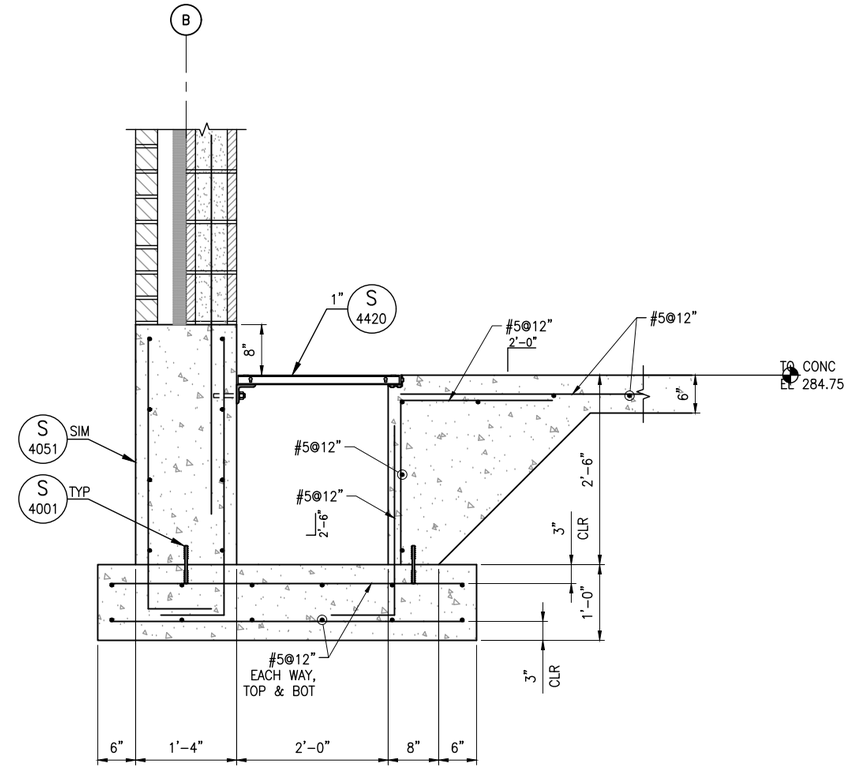

SECTION B

SCALE: 1"=1'-0"

S-01

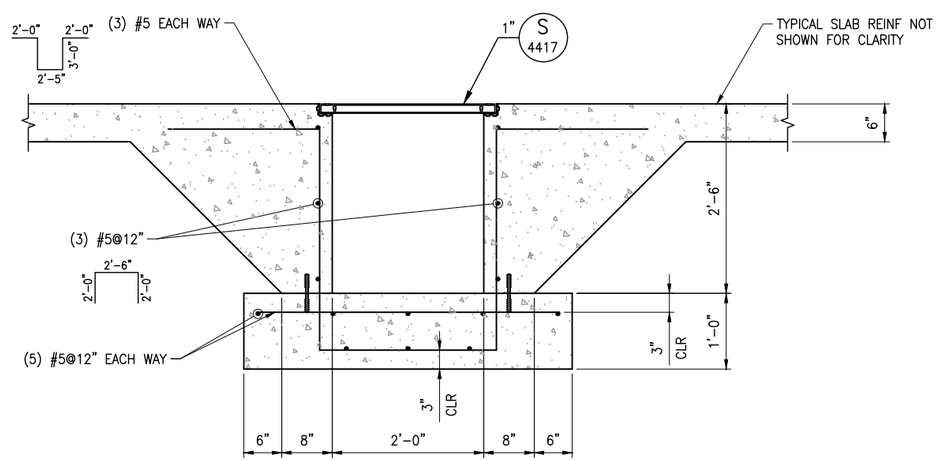

SECTION C

SCALE: 1"=1'-0"

S-01

AMERICAN WATER
Military Services
Joint Base Lewis-McChord

BOWEN COLLINS & ASSOCIATES

90% REVIEW

NOT FOR CONSTRUCTION
FOR REVIEW ONLY

NO.	DATE	REV. BY	DESCRIPTION

REVISIONS

AMERICAN WATER (P4-A60MWA2-00002)
WELL 13 REPLACEMENT
FOR AMERICAN WATER MILITARY SERVICES

VERIFY SCALE
BAR IS ONE INCH ON ORIGINAL DRAWING

REVIEW
CHECKED
APPROVED S. COHEN

DESIGN
DESIGN S. COHEN
DRAWN P. BAXTER

STRUCTURAL
WELL 13 SECTIONS

PROJECT NUMBER 427-22-02
DATE: DECEMBER 2023

DRAWING NO.
S-03

SHEET 22 OF 60

P:\American Water\427-22-01, 02, 03 JBLM Wells\2.0 Design Phase\2.9 Drawings\sht\Well 13\4272202_S-03.dwg Plotted: 12/27/2023 1:03 PM By: Preston Baxter

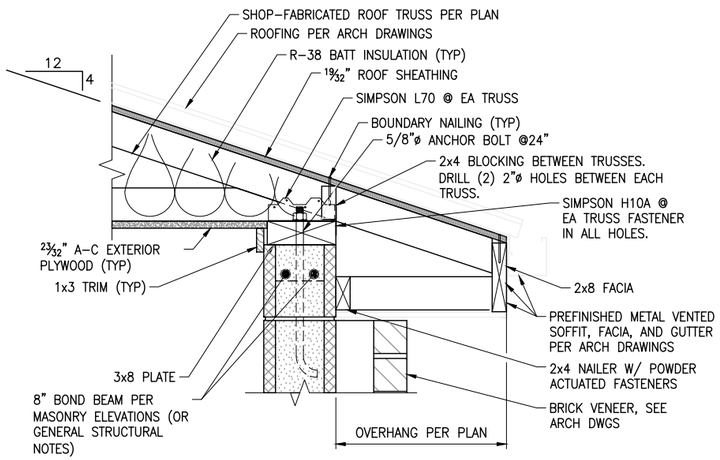

SECTION A S-02

SCALE: 1-1/2"=1'-0"

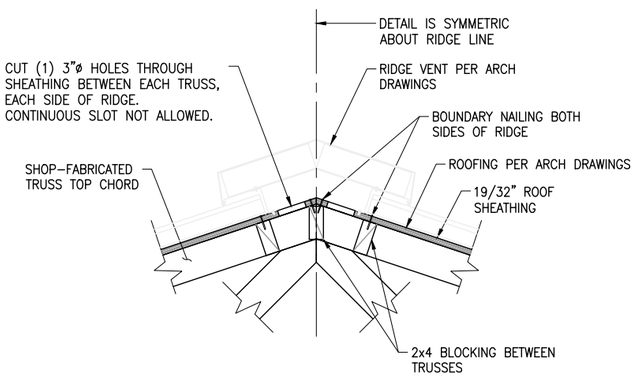

SECTION B S-02

SCALE: 1-1/2"=1'-0"

AMERICAN WATER
Military Services
Joint Base Lewis-McChord

BOWEN COLLINS & ASSOCIATES

90% REVIEW

NOT FOR CONSTRUCTION
FOR REVIEW ONLY

NO.	DATE	REV. BY	DESCRIPTION

REVISIONS

AMERICAN WATER (P4-A60MWA2-00002)
WELL 13 REPLACEMENT
FOR AMERICAN WATER MILITARY SERVICES

VERIFY SCALE
BAR IS ONE INCH ON ORIGINAL DRAWING

REVIEW
CHECKED
APPROVED S. COHEN

DESIGN
DESIGN S. COHEN
DRAWN P. BAXTER

STRUCTURAL
WELL 13
STRUCTURAL ROOF DETAILS

DATE: DECEMBER 2023
PROJECT NUMBER 427-22-02

DRAWING NO.
S-04

SHEET 23 OF 60

P:\American Water\427-22-01, 02, 03 JBLM Wells\2.0 Design Phase\2.9 Drawings\sht\Well 13\4272202_S-04.dwg Plotted: 12/27/2023 1:03 PM By: Preston Baxter

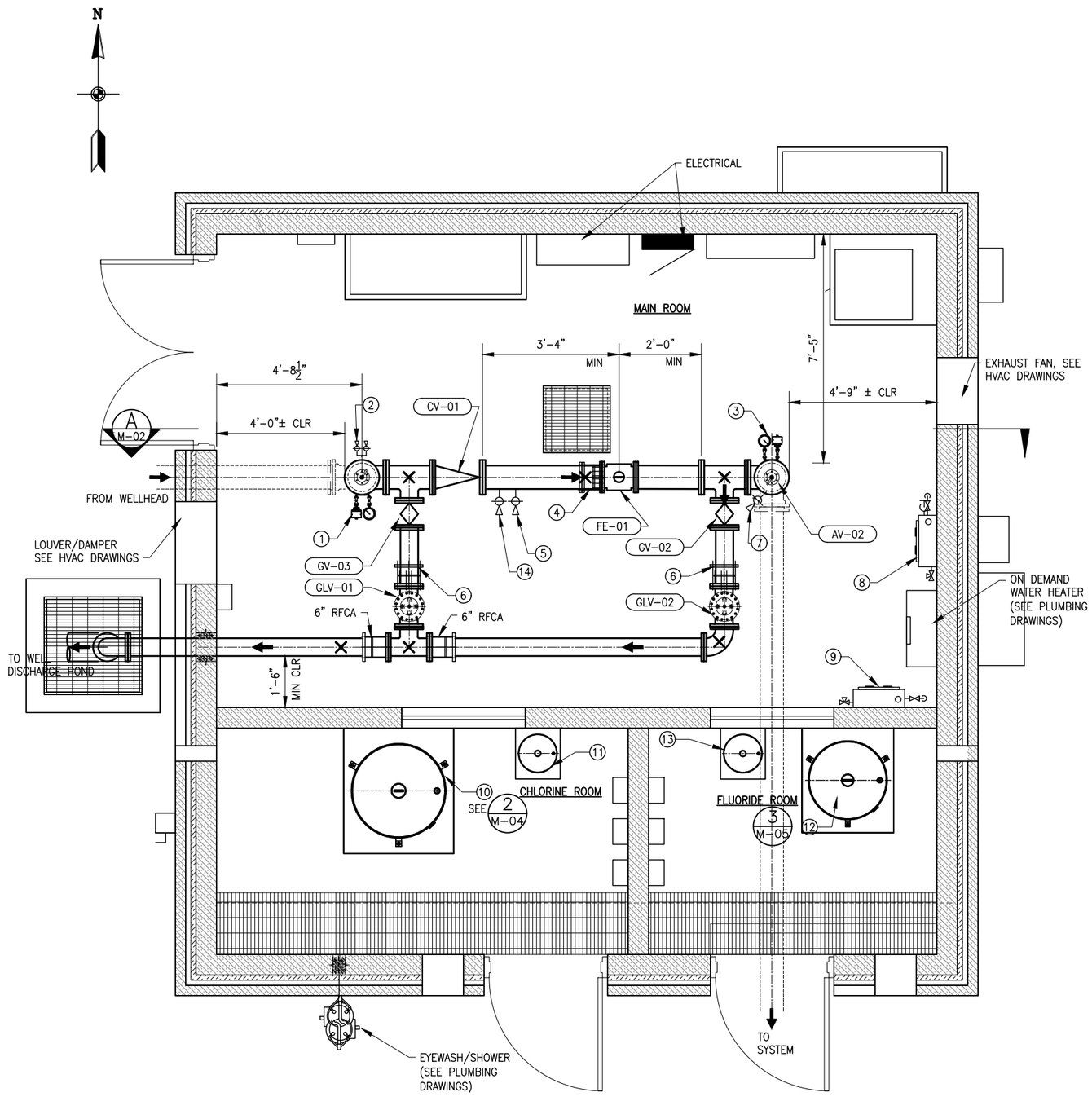

PLAN
SCALE: 1/2"=1'-0"

VALVE, EQUIPMENT AND PIPING SCHEDULE

TAG	SIZE	ENDS	DESCRIPTION
GLV-01	6"	FLG	GLOBE STYLE PUMP CONTROL VALVE WITH SOLENOID. FUSION BONDED EXPOXY LINED AND COATED, ENERGIZE TO CLOSE; CLA-VAL 61-02, SST TRIM, ROUTE TO DRAIN HUB WITH 6" AIR GAP AND #14 SST SCREEN. CONNECT PRESSURE SUPPLY LINE TO SYSTEM SIDE PRESSURE. ANTI-CAVITATION TRIM, TWO LIMIT SWITCHES, SEE ELECTRICAL DRAWINGS.
GLV-02	6"	FLG	GLOBE STYLE PRESSURE RELIEF VALVE; CLA-VAL 52-03, FUSION BONDED EXPOXY LINED AND COATED, SST TRIM, CRL PILOT CONTROL, CONNECT PRESSURE SENSING LINE TO SYSTEM SIDE PRESSURE, OPEN STATUS LIMIT SWITCH, SEE ELECTRICAL DRAWINGS. HIGH PRESSURE SET AT 95 PSI.
CV-01	8"	FLG	VALMATIC SERIES 7200 SURGEBUSTER CHECK VALVE WITH POSITION INDICATOR, FUSION BONDED EPOXY LINED AND COATED OR EQUAL.
FE-01	8"	FLG	MAGNETIC FLOW METER SIEMENS 5100W WITH 6580 CONFIGURATION AND WALL MOUNT TRANSMITTER, SEE DETAIL M/3149
AV-01	2"	NPT	WELL SERVICE AIR VALVE WITH THROTTLE DEVICE, VALMATIC 102ST OR EQUAL FUSION BONDED EPOXY LINED AND COATED, SEE DETAIL M/3143
AV-02	2"	NPT	COMBINATION AIR VALVE VALMATIC 202C.2, SEE DETAIL M/3143
GV-01	8"	FLG	WITH HAND WHEEL
GV-02	6"	FLG	WITH HAND WHEEL
GV-03	6"	FLG	WITH HAND WHEEL
1	½"	NPT	PRESSURE GAUGE AND PRESSURE SWITCH, SEE DETAIL M/3183
2	¾"	NPT	HOSE BIB AND SMOOTH NOSE SAMPLE TAP, SEE DETAIL M/3138
3	½"	NPT	PRESSURE GAUGE AND PRESSURE TRANSMITTER, SEE DETAIL M/3183
4	10"	FLG	DISMANTLING JOINT ROMAC DJ400
5	1"	NPT	TAP FOR CHLORINE DOSING AND INJECTION ASSEMBLY, SEE DETAIL M/3167. ASSEMBLY SHALL INCLUDE CHECK VALVE, CORP STOP, INJECTION QUILL AND CHAIN.
6	6"	FLG	DISMANTLING JOINT ROMAC DJ400
7	1"	NPT	TAP FOR FLUORIDE DOSING AND INJECTION ASSEMBLY, SEE DETAIL M/3167. ASSEMBLY SHALL INCLUDE CHECK VALVE, CORP STOP, INJECTION QUILL AND CHAIN.
8	---	---	CHLORINE ANALYZER S::CAN CHLORI:LYSER, FREE CHLORINE, REAGENTLESS WITH FLOWCELL, S:CAN TERMINAL AND SOFTWARE, CON::CUBE V3 D-315-OUT-MA; MOUNT ON NANO::STATION SYSTEM BACK PANEL. INCLUDE CALIBRATION FLUIDS AND REPLACEMENT COMPONENTS FOR 1 YEAR OF SERVICE. ROUTE DISCHARGE TO HUB DRAIN; SEE DRAWING P-03.
9	---	---	FLUORIDE ANALYZER S::CAN FLUOR:LYSER, REAGENTLESS WITH FLOWCELL, S:CAN TERMINAL AND SOFTWARE, CON::CUBE V3 D-315-OUT-MA; MOUNT ON NANO::STATION BACK PANEL OR APPROVED EQUAL. INCLUDE CALIBRATION FLUIDS AND REPLACEMENT COMPONENTS FOR 1 YEAR OF SERVICE. ROUTE DISCHARGE TO HUB DRAIN; SEE DRAWING P-03.
10	225 GAL	---	CHLORINE BULK TANK, SEE 2/M-04
11	12 GAL	---	CHLORINE DAY TANK, SEE 2/M-04
12	130 GAL	---	FLUORIDE BULK TANK SEE 3/M-05
13	6 GAL	---	FLUORIDE DAY TANK SEE 3/M-05
14	1"	NPT	TAP FOR GLV-01 PILOT FEED TUBING, SEE DETAIL M/3167

BUILDING NOTES:

1. KEY NOTES, VALVE, PIPING AND EQUIPMENT SCHEDULE ON DRAWING NO. M-01.
2. FOR CONTINUATION OF BURIED PIPING REFER TO DRAWING NO. C-03.
3. ALL PIPING UNDER FLOOR SLAB SHALL BE CONCRETE ENCASED, SEE STRUCTURAL DRAWINGS. DO NOT POLY-WRAP CONCRETE ENCASED PIPE.
4. ALL ABOVE GROUND MECHANICAL PIPING IS 6" OR 10"" DIA. UNO. NOT ALL PIPING LESS THAN OR EQUAL TO 1"ø IS SHOWN.
5. X- REPRESENTS LOCATION OF PIPE SUPPORTS, SEE DETAIL M/3389
6. ALL PIPING SHALL BE EPOXY COATED DUCTILE IRON UNO. COATING SYSTEM 4 PER SPECIFICATION 00 90 00.
7. CONTRACTOR SHALL COORDINATE WITH ELECTRICAL CONTRACTOR REGARDING FINAL LOCATION OF CONDUIT.
8. EXTEND CONCRETE ENCASEMENT FOR ALL PIPES BELOW THE STRUCTURE BEYOND BUILDING FOOTING. SEE STRUCTURAL DRAWINGS.
9. PIPE TAPS ON UNDERGROUND PIPES SHALL BE SADDLE TAPS. PIPE TAPS ON EXPOSED PIPING SHALL BE SADDLE TAPS UNLESS LOCATION DOES NOT ALLOW A SADDLE.
10. REFER TO CHEMICAL SCHEMATIC SHEETS FOR CHEMICAL SYSTEM PIPING REQUIREMENTS.
11. CLEARLY LABEL ALL CHEMICAL PIPING, SAMPLE LINES, AND OTHER PIPING 2" DIA AND SMALLER.
12. SUPPORT ALL PIPES AND CONDUITS PER M/3372 OR SIMILAR.

AMERICAN WATER
Military Services
Joint Base Lewis-McChord

BOWEN COLLINS & ASSOCIATES

90% REVIEW

NOT FOR CONSTRUCTION
FOR REVIEW ONLY

NO.	DATE	REV. BY	DESCRIPTION

REVISIONS

AMERICAN WATER (P4-A60MWA2-00002)
WELL 13 REPLACEMENT
FOR AMERICAN WATER MILITARY SERVICES

VERIFY SCALE
BAR IS ONE INCH ON ORIGINAL DRAWING

REVIEW
CHECKED R. ROCHA
APPROVED J. OLDHAM

DESIGN
DESIGN J.O./R.G.
DRAWN R. GARCIA

MECHANICAL

WELL 13 - PLAN

PROJECT NUMBER 427-22-02
DATE: MAY 2023

DRAWING NO.
M-01

SHEET 24 OF 60

P:\American Water\427-22-01, 02, 03 JBLM Wells\2.0 Design Phase\2.9 Drawings\sht\Well 13\4272202_M-01.dwg Plotted: 12/26/2023 2:21 PM By: Rodolfo Garcia

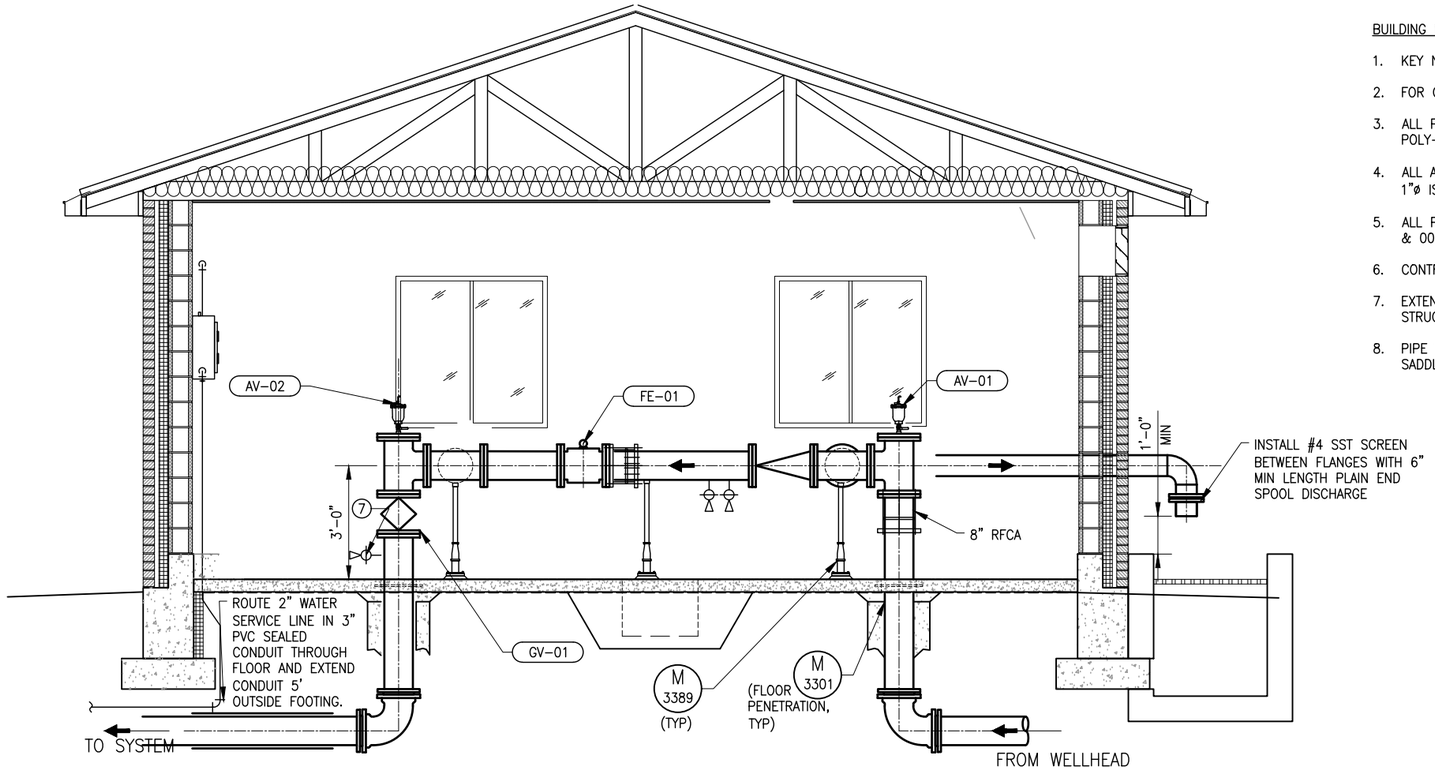

BUILDING NOTES:

1. KEY NOTES, VALVE, PIPING AND EQUIPMENT SCHEDULE ON DRAWING NO. M-01.
2. FOR CONTINUATION OF BURIED PIPING REFER TO DRAWING NO. C-03.
3. ALL PIPING UNDER FLOOR SLAB SHALL BE CONCRETE ENCASED, SEE STRUCTURAL DRAWINGS. DO NOT POLY-WRAP CONCRETE ENCASED PIPE.
4. ALL ABOVE GROUND MECHANICAL PIPING IS 6" OR 10"" DIA. UNO. NOT ALL PIPING LESS THAN OR EQUAL TO 1"ø IS SHOWN.
5. ALL PIPING SHALL BE EPOXY COATED DUCTILE IRON UNO. COATING SYSTEM 4 PER SPECIFICATION 00 90 00 & 00 90 10.
6. CONTRACTOR SHALL COORDINATE WITH ELECTRICAL CONTRACTOR REGARDING FINAL LOCATION OF CONDUIT.
7. EXTEND CONCRETE ENCASEMENT FOR ALL PIPES BELOW THE STRUCTURE BEYOND BUILDING FOOTING. SEE STRUCTURAL DRAWINGS.
8. PIPE TAPS ON UNDERGROUND PIPES SHALL BE SADDLE TAPS. PIPE TAPS ON EXPOSED PIPING SHALL BE SADDLE TAPS UNLESS LOCATION DOES NOT ALLOW A SADDLE.

AMERICAN WATER
Military Services
Joint Base Lewis-McChord

BOWEN COLLINS & ASSOCIATES

90% REVIEW

NOT FOR CONSTRUCTION
FOR REVIEW ONLY

REVISIONS

NO.	DATE	REV. BY	DESCRIPTION

AMERICAN WATER (P4-A60MWA2-00002)
WELL 13 REPLACEMENT
FOR AMERICAN WATER MILITARY SERVICES

VERIFY SCALE
BAR IS ONE INCH ON ORIGINAL DRAWING

REVIEW
CHECKED R. ROCHA
APPROVED J. OLDHAM

DESIGN
DESIGN J.O./R.G.
DRAWN R/ GARCIA

MECHANICAL

WELL 13 - SECTION

PROJECT NUMBER 427-22-02
DATE: MAY 2023

DRAWING NO.
M-02

SHEET 25 OF 60

P:\American Water\427-22-01, 02, 03 JBLM Wells\2.0 Design Phase\2.9 Drawings\shtl\Well 13\4272202_M-02.dwg Plotted: 12/26/2023 2:21 PM By: Rodolfo Garcia

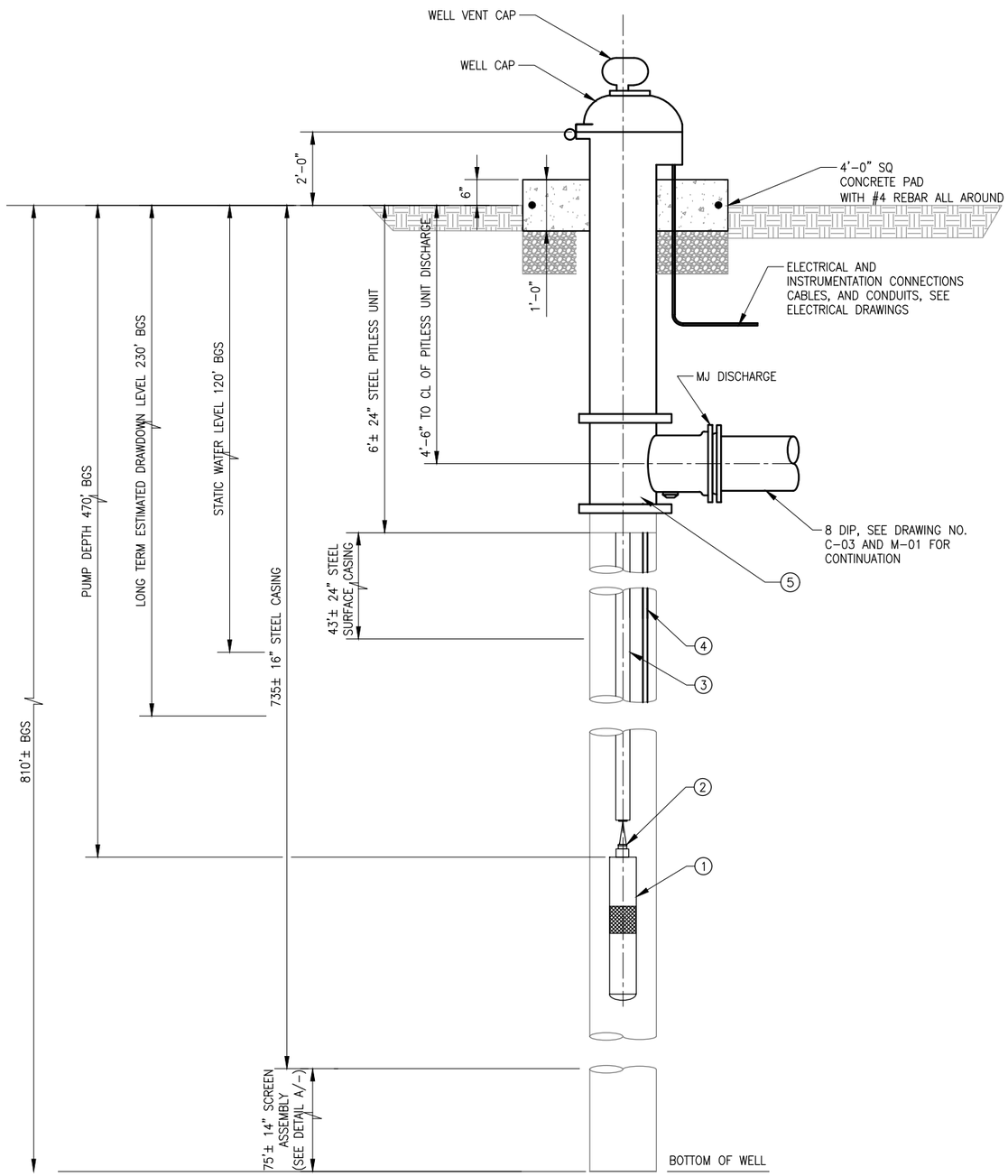

PITLESS UNIT

SCALE

1 / C-02

EQUIPMENT SCHEDULE

NO.	DESCRIPTION	SIZE (IN)	REMARKS
1	SUBMERSIBLE PUMP AND MOTOR	6	1000 GPM AT 800 FT TOTAL DYNAMIC HEAD (THIS TARGET FLOW RATE AND HEAD IS STILL IN DEVELOPMENT AND WILL BE ADJUSTED BASED ON WELL TEST RESULTS)
2	CHECK VALVE	6	ABOVE PUMP TYPICAL OF 2 (MIN), LOCATE AS RECOMMENDED BY PUMP SUPPLIER
3	PUMP COLUMN	6	ASTM A-53 BLACK STEEL
4	WATER LEVEL ACCESS TUBES (x2)	1.25	SEE NOTE 1
5	PITLESS UNIT	16	BAKER MONITOR CUSTOM, NSF 61 CERTIFIED, EPOXY COATED, WATER PROBE TUBES, WATERTIGHT CAP WITH SCREENED AIR VENT, 6" DROP PIPE, 8" MJ DISCHARGE, 4'-6" BURY DEPTH FROM GROUND SURFACE TO CENTERLINE OF DISCHARGE. PITLESS CASE SHALL EXTEND 24" ABOVE GROUND SURFACE.

NOTES:

1. PVC TUBES SHALL BE INSTALLED WITH THE COLUMN. THE TUBES SHALL BE A MINIMUM OF 1.25" SCHEDULE 80 FLUSH THREAD PVC PIPE. THREADS SHALL CONFORM TO ASTM F480. THE TUBES SHALL EXTEND FROM THE TOP OF THE PUMP ASSEMBLY TO THE SURFACE. THE BOTTOM OF THE TUBE SHALL BE CAPPED. THE BOTTOM 10 FEET OF THE TUBES SHALL BE SLOTTED. SLOT SIZE SHALL BE 0.020", AND CONFORM TO ASTM F-480. THE TUBES SHALL BE STRAPPED TO THE DISCHARGE COLUMN WITH 316 SST BANDS AT 10-FT INTERVALS. INSTALL LEVEL TRANSMITTER 10' ABOVE THE PUMP AND MOTOR IN ONE OF THE TUBES.
2. ALL BURIED PIPING SHALL BE RESTRAINED WITH MECHANICAL JOINTS AND MEGALUGS OR FLANGES ON FITTINGS. BENDS SHALL ALSO HAVE THRUST BLOCKS PER AW STANDARD DETAIL MSG-W-08.
3. CUT AND REMOVE EXISTING SURFACE CASING AS REQUIRED TO WELD PITLESS UNIT TO EXISTING CASING. ALL WORK SHALL BE IN COMPLIANCE WITH STATE OF WASHINGTON AND DEPARTMENT OF HEALTH RULES.

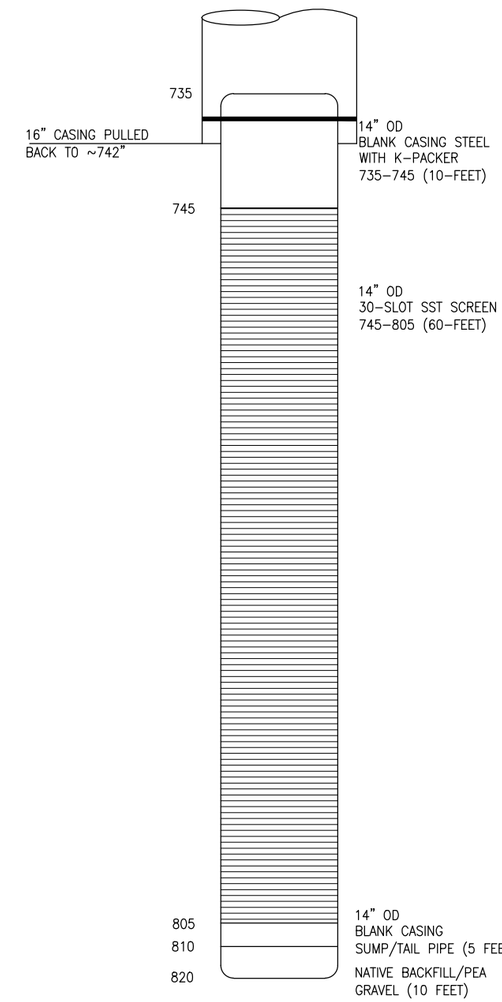

WELL 13 SCREEN ASSEMBLY

SCALE: NTS

A / ---

AMERICAN WATER
Military Services
Joint Base Lewis-McChord

BOWEN COLLINS & ASSOCIATES

90% REVIEW

NOT FOR CONSTRUCTION
FOR REVIEW ONLY

NO.	DATE	REV. BY	DESCRIPTION

REVISIONS

AMERICAN WATER (P4-A60/MVA2-00002)
WELL 13 REPLACEMENT
FOR AMERICAN WATER MILITARY SERVICES

VERIFY SCALE
BAR IS ONE INCH ON ORIGINAL DRAWING

REVIEW
CHECKED R. ROCHA
APPROVED J. OLDHAM

DESIGN
DESIGN J. OLDHAM
DRAWN R. GARCIA

MECHANICAL

WELL HEAD DETAILS

PROJECT NUMBER 427-22-02
DATE: DECEMBER 2023

DRAWING NO.
M-03

SHEET 26 OF 60

P:\American Water\427-22-01, 02, 03 JBLM Wells\2.0 Design Phase\2.9 Drawings\sht\Well 13\4272202_M-03.dwg Plotted: 1/12/2024 2:02 PM By: Jon Oldham

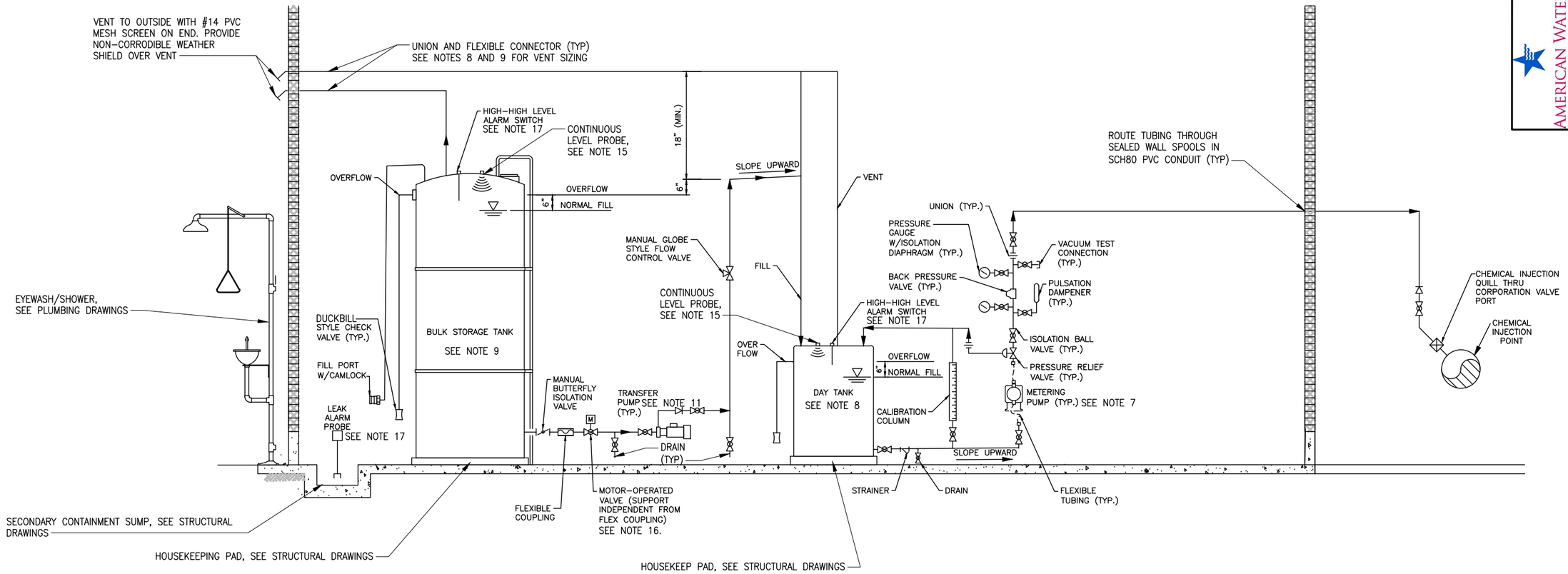

CHLORINE DOSING PROCESS SYSTEM SCHEMATIC (2 / M-01)

SCALE: NTS

NOTES:

1. THIS SCHEMATIC INDICATES THE MAJOR REQUIRED COMPONENTS FOR A SODIUM HYPOCHLORITE CHLORINATION SYSTEM FOR 12 LB/DAY CHLORINE MAX WITH 20:1 TURN DOWN. CONTRACTOR SHALL FURNISH AND INSTALL ALL COMPONENTS, PIPE, FITTINGS, VALVES, ADAPTERS, SUPPORTS, AND BRACKETS TO MAKE A COMPLETE AND FUNCTIONAL SYSTEM.
2. PROVIDE NAMED COMPONENTS OR EQUAL.
3. ALL PIPE, FITTINGS AND VALVES SHALL BE SCH 80 PVC OR OTHER SUITABLE MATERIALS RECOMMENDED BY MANUFACTURER AND APPROVED BY OWNER AND ENGINEER. FLEXIBLE HOSE AND TUBING SHALL BE BRAIDED PVC.
4. FITTINGS SHALL BE PVC, GASKETS SHALL BE EPDM/VITON AND BOLTS SHALL BE TITANIUM.
5. PROVIDE TUBING, FITTINGS AND BRACKETS TO ROUTE AND SECURE THE TUBING AS REQUIRED AND RECOMMENDED BY MANUFACTURER.
6. MOUNT COMPONENTS TO WALL AND SECURE AND SUPPORT AS REQUIRED WITH FIBERGLASS UNISTRUT AND PIPE HANGERS. SEE DETAIL M/3372 (SIM)
7. STENNER METERING/DOSING CONTROL PUMP WITH TUBING. MULTI FUNCTION VALVE FOR BACK PRESSURE, PRESSURE RELIEF, AND ANTI-SIPHON PROTECTION. MOUNT ON PVC WALL SHELF, OR 4" THICK CONCRETE PAD. SYSTEM PRESSURE AT INJECTION LOCATION IS ANTICIPATED TO BE APPROXIMATELY 80 PSI.
8. DAY TANK SHALL MEET THE FOLLOWING REQUIREMENTS:
   - LHDPE TANK, SIZE PER MECHANICAL PLAN
   - 1" VENT PIPING
   - 1" OVERFLOW SIDE OUTLET AND PIPING WITH DUCKBILL VALVE
   - PROVIDE SIGNS FOR TANK:
     a. DANGER – SODIUM HYPOCHLORITE
     b. SODIUM HYPOCHLORITE ANTIDOTE SIGN
     c. NFPA DIAMOND SIGN
9. BULK STORAGE TANK SHALL MEET THE FOLLOWING REQUIREMENTS:
   - LHDPE TANK
   - 36" DIAMETER. SEE MECHANICAL PLAN FOR VOLUME
   - SEISMIC TIE-DOWN SYSTEM AS RECOMMENDED BY MANUFACTURER AND DESIGNED BY PROFESSIONAL ENGINEER.
   - PROVIDE SIGNS FOR TANK:
     a. DANGER – SODIUM HYPOCHLORITE
     b. SODIUM HYPOCHLORITE ANTIDOTE SIGN
     c. NFPA DIAMOND SIGN
   - BULKHEAD FITTINGS/OPENINGS AT THE TOP OF THE TANK FOR:
     a. 3" VENT OPENING FOR INVERTED J VENT TO OUTSIDE
     b. PUMP SUCTION LINE (SIZE AND LOCATION PER PUMP SUPPLIER RECOMMENDATIONS)
     c. 2" FILL PORT ASSEMBLY WITH PVC ANTI-FOAM ELBOW AND LOCKING FILL DEVICE (2" MALE CAMLOCK WITH CAP). ORIENT IN EASILY ACCESSIBLE LOCATION APPROVED BY OWNER.
     d. PROVIDE SPILL BASIN WITH NEUTRALIZING REAGENT BELOW FILL PORT AND OVERFLOW.
10. ALL BALL VALVES SHALL HAVE 1/8" VENT PORT ON DOWNSTREAM SIDE OF BALL TO RELIEVE INTERNAL PRESSURES.
11. TRANSFER PUMP SHALL DELIVER 10GPM AND BE SUITABLE FOR SODIUM HYPOCHLORITE. PUMP SHALL BE SEALLESS MAGNETIC DRIVE CENTRIFUGAL AS MANUFACTURED BY SETHCO OR MARCH. INSTALL ON 4" THICK CONCRETE PAD WITH 2" CLEARANCE ON ALL SIDES OF PUMP.
12. NOT ALL HOUSEKEEPING PADS ARE SHOWN.
13. DO NOT LOCATE VALVES GREATER THAN 6' ABOVE FINISHED FLOOR.
14. INJECTION LOCATION ON PIPELINE SHALL BE IN THE LOWER HALF AT A 45 DEGREE ANGLE FROM VERTICAL.
15. CONTINUOUS LEVEL PROBE SHALL BE RADAR STYLE VEGAPULS 21 WITH VEGAMET 841 OR APPROVED EQUAL.
16. ELECTRIC CONTROL VALVE SHALL BE PVC BALL VALVE, OMNI TYPE 27 WITH SERIES 19 ON/OFF ACTUATOR OR EQUAL.
17. SEE ELECTRICAL DRAWINGS FOR REQUIREMENTS.
18. SEAL ALL CHLORINE ROOM PENETRATIONS, INCLUDING ELECTRICAL DUCTS TO PROVIDE AIR TIGHT SEAL FROM MAIN PUMP ROOM.

AMERICAN WATER
Military Services
Joint Base Lewis-McChord

BOWEN COLLINS & ASSOCIATES

90% REVIEW

NOT FOR CONSTRUCTION FOR REVIEW ONLY

NO.	DATE	REV. BY	DESCRIPTION

REVISIONS

AMERICAN WATER (P4-A60MWA2-00002)
WELL 13 REPLACEMENT
FOR AMERICAN WATER MILITARY SERVICES

VERIFY SCALE
BAR IS ONE INCH ON ORIGINAL DRAWING

REVIEW
CHECKED R. ROCHA
APPROVED J. OLDHAM

DESIGN
DESIGN J. OLDHAM
DRAWN R. GARCIA

MECHANICAL

CHLORINE DOSING PROCESS SYSTEM SCHEMATIC

PROJECT NUMBER 427-22-02
DATE: MAY 2023

DRAWING NO.
M-04

SHEET 27 OF 60

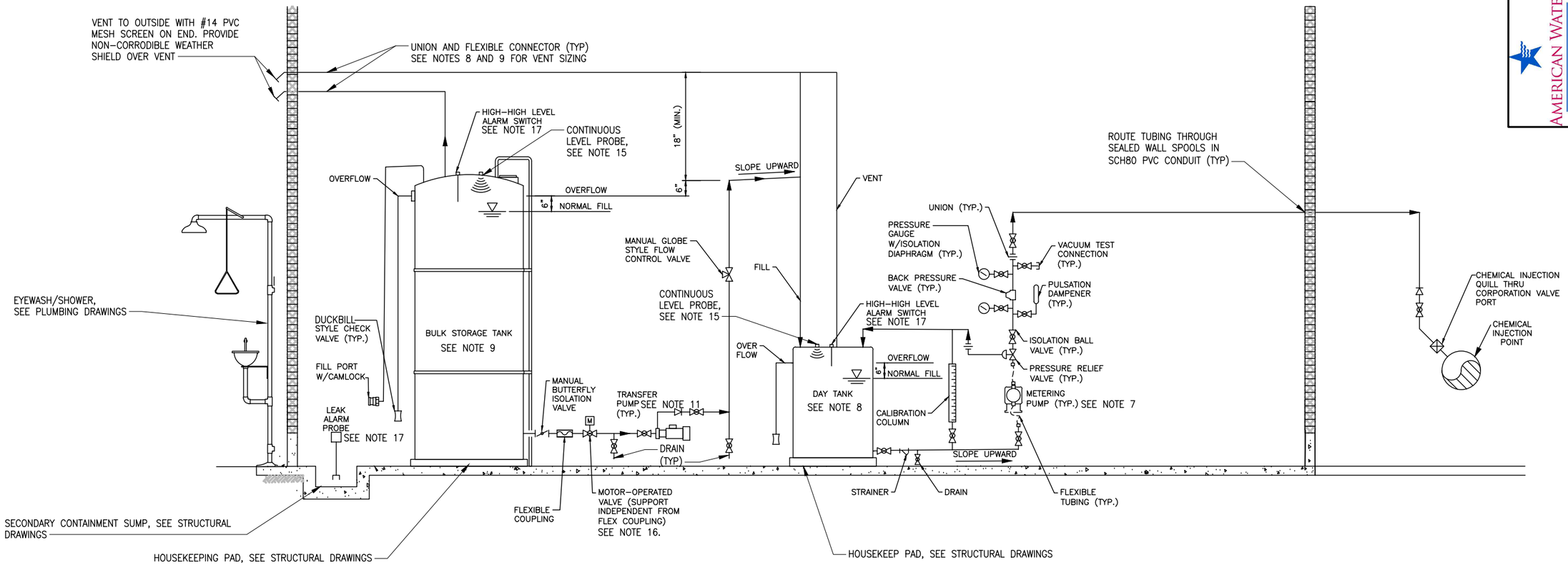

NOTES:

1. THIS SCHEMATIC INDICATES THE MAJOR REQUIRED COMPONENTS FOR A HYDROFLUOSILICIC ACID SYSTEM FOR UP TO 5 GAL/DAY OF 24–30% ACID MAX WITH 20:1 TURN DOWN. CONTRACTOR SHALL FURNISH AND INSTALL ALL COMPONENTS, PIPE, FITTINGS, VALVES, ADAPTERS, SUPPORTS, AND BRACKETS TO MAKE A COMPLETE AND FUNCTIONAL SYSTEM. SCALE DOSING WELL PUMPS TO DELIVER 5 GAL/DAY MAX AND BASE DOSING ON WELL FLOW METER.
2. PROVIDE NAMED COMPONENTS OR EQUAL.
3. PROVIDE BULKHEADS, FITTINGS, REDUCERS, AND SEALS AS REQUIRED TO MAKE CONNECTIONS. ALL TANK PENETRATIONS SHALL BE MADE WITH APPROPRIATE SEAL. ALL MATERIALS SHALL BE SUITABLE FOR FSA.
4. PIPE AND FITTINGS SHALL BE PVC, GASKETS SHALL BE EPDM AND BOLTS SHALL BE ALLOY C–276. FLEXIBLE HOSE AND TUBING SHALL BE BRAIDED PVC.
5. PROVIDE TUBING, FITTINGS AND BRACKETS TO ROUTE AND SECURE THE TUBING AS REQUIRED AND RECOMMENDED BY MANUFACTURER.
6. MOUNT COMPONENTS TO WALL AND SECURE AND SUPPORT AS REQUIRED WITH FIBERGLASS UNISTRUT AND FSA RESISTANT PIPE HANGERS. SEE DETAIL M/3372 (SIM)
7. STENNER METERING/DOSING CONTROL PUMP WITH TUBING. MULTI FUNCTION VALVE FOR BACK PRESSURE, PRESSURE RELIEF, AND ANTI–SIPHON PROTECTION. MOUNT ON PVC WALL SHELF, OR 4" THICK CONCRETE PAD. SYSTEM PRESSURE AT INJECTION LOCATION IS ANTICIPATED TO BE APPROXIMATELY 80 PSI.
8. DAY TANK SHALL MEET THE FOLLOWING REQUIREMENTS:
   - LHDPE TANK, SIZE PER MECHANICAL PLAN
   - 1" VENT PIPING
   - 1" OVERFLOW SIDE OUTLET AND PIPING WITH DUCKBILL VALVE
   - PROVIDE SIGNS FOR TANK:
     a. DANGER – HYDROFLUOSILICIC ACID
     b. HYDROFLUOSILICIC ACID ANTIDOTE SIGN
     c. NFPA DIAMOND SIGN
9. BULK STORAGE TANK SHALL MEET THE FOLLOWING REQUIREMENTS:
   - LHDPE TANK
   - 36" DIAMETER. SEE MECHANICAL PLAN FOR VOLUME
   - SEISMIC TIE–DOWN SYSTEM AS RECOMMENDED BY MANUFACTURER AND DESIGNED BY PROFESSIONAL ENGINEER.
   - PROVIDE SIGNS FOR TANK:
     a. DANGER – HYDROFLUOSILICIC ACID
     b. SODIUM HYDROFLUOSILICIC ACID
     c. NFPA DIAMOND SIGN
   - BULKHEAD FITTINGS/OPENINGS AT THE TOP OF THE TANK FOR:
     a. 3" VENT OPENING FOR INVERTED J VENT TO OUTSIDE
     b. PUMP SUCTION LINE (SIZE AND LOCATION PER PUMP SUPPLIER RECOMMENDATIONS)
     c. 2" FILL PORT ASSEMBLY WITH PVC ANTI–FOAM ELBOW AND LOCKING FILL DEVICE (2" MALE CAMLOCK WITH CAP). ORIENT IN EASILY ACCESSIBLE LOCATION APPROVED BY OWNER.
     d. PROVIDE SPILL BASIN WITH NEUTRALIZING REAGENT BELOW FILL PORT AND OVERFLOW.
10. ALL BALL VALVES SHALL HAVE 1/8" VENT PORT ON DOWNSTREAM SIDE OF BALL TO RELIEVE INTERNAL PRESSURES.
11. TRANSFER PUMP SHALL DELIVER 5 GPM AND BE SUITABLE FOR HYDROFLUOSILICIC ACID. PUMP SHALL BE SEALLESS MAGNETIC DRIVE CENTRIFUGAL AS MANUFACTURED BY SETHCO OR MARCH. INSTALL ON 4" THICK CONCRETE PAD WITH 2" CLEARANCE ON ALL SIDES OF PUMP.
12. NOT ALL HOUSEKEEPING PADS ARE SHOWN.
13. DO NOT LOCATE VALVES GREATER THAN 6' ABOVE FINISHED FLOOR.
14. INJECTION LOCATION ON PIPELINE SHALL BE IN THE LOWER HALF AT A 45 DEGREE ANGLE FROM VERTICAL.
15. CONTINUOUS LEVEL PROBE SHALL BE RADAR STYLE VEGAPULS 21 WITH VEGAMET 841 OR APPROVED EQUAL.
16. ELECTRIC CONTROL VALVE SHALL BE PVC BALL VALVE, OMNI TYPE 27 WITH SERIES 19 ON/OFF ACTUATOR OR EQUAL.
17. SEE ELECTRICAL DRAWINGS FOR REQUIREMENTS.
18. SEAL ALL FLUORIDE ROOM PENETRATIONS, INCLUDING ELECTRICAL DUCTS TO PROVIDE AIR TIGHT SEAL FROM MAIN PUMP ROOM.

Well 13 Replacement--JBLM Lewis PWS ID 26050, Fluoride Dosing Calculations

Weight of hydrofluorosilicic acid (HFA)	10.3	lbs/gallon
HFA Purity (23%-25%)	24%	
Weight of Pure Acid	2.472	lbs acid/gallon
% Pure Fluoride	79%	calculated from molecular weight
Well Pump Rate	1000	gpm
Target Fluoride Level	0.7	mg/L
Natural Fluoride Level	0	mg/L **(need confirmation on actual levels)**
	(gallons to be treated x concentration (dose) x 8.34	
lbs Fluoride per day =	lbs/gal) / 1,000,000	
=	8.41	lbs of pure fluoride needed per day
lbs fluoride per gallon =	weight/gallon x % acid x % pure	
=	1.95	lbs fluoride/gallon
Gallons per day =	(lbs/day) / (lbs/gallon)	
=	**4.30**	**gal/day**
Recommended Minimum Number of Days Storage per T-2 3.2.D	30	days
Tank size required to provide recommended minimum storage =	129.1	gallons
Selected Tank Size	**130**	**gallons**
Day Tank @ 125% daily volume per T-2 5.2.A	**5.4**	**gallons**
Minimum Secondary Containment Volume	**143**	**gallons**
@110% largest tank	**19.1**	**cubic ft**
Available Secondary Containment Sump =	**46.7**	**cubic ft**
9.33' x 2.5' x 2' =	**348.9**	**gallons**

FLUORIDE DOSING PROCESS SYSTEM SCHEMATIC

SCALE: NTS

3 / M–01

AMERICAN WATER Military Services
Joint Base Lewis-McChord

BOWEN COLLINS & ASSOCIATES

90% REVIEW

NOT FOR CONSTRUCTION FOR REVIEW ONLY

NO.	DATE	REV. BY	DESCRIPTION

REVISIONS

AMERICAN WATER (P4-A60MWA2-00002)
WELL 13 REPLACEMENT
FOR AMERICAN WATER MILITARY SERVICES

VERIFY SCALE
BAR IS ONE INCH ON ORIGINAL DRAWING

REVIEW
CHECKED R. ROCHA
APPROVED J. OLDHAM

DESIGN
DESIGN J. OLDHAM
DRAWN R. GARCIA

MECHANICAL

FLUORIDE DOSING PROCESS SYSTEM SCHEMATIC

PROJECT NUMBER 427-22-02
DATE: MAY 2023

DRAWING NO. M-05

SHEET 28 OF 60

P:\American Water\427-22-01, 02, 03 JBLM Wells\2.0 Design Phase\2.9 Drawings\shit\Well 13\4272202_M-05.dwg Plotted: 12/26/2023 2:19 PM By: Rodolfo Garcia

GENERAL NOTES

1. COORDINATE INSTALLATION OF PIPING AND DUCTWORK WITH STRUCTURAL COMPONENTS AND OTHER SYSTEM INSTALLATIONS. GENERAL CONTRACTOR TO SAW CUT AND CORE DRILL, PATCH AND REPAIR SURFACES AS REQUIRED.
2. DUCT PENETRATIONS THRU ROOF ARE TO BE COORDINATED WITH ROOF FRAMING. COORDINATE TO STRUCTURAL PLANS FOR EXACT LOCATIONS.
3. ALL DUCT DIMENSIONS SHOWN ARE INTERIOR DIMENSIONS.
4. VERIFY AND COORDINATE EXACT LOCATION OF T-STATS WITH ELECTRICAL CONTRACTOR PRIOR TO INSTALLATION FOR CONDUIT AND BACKBOX.
5. COORDINATE EXACT LOCATION OF PANEL WITH ELECTRICAL CONTRACTOR. COORDINATE ACCESS PANELS FOR HARD CEILINGS WITH GENERAL CONTRACTOR.
6. COORDINATE LOCATION OF HVAC EQUIPMENT WITH ALL OTHER TRADES TO MAINTAIN ACCESS AND SERVICE CLEARANCE.
7. SEE ARCHITECTURAL SHEETS FOR BUILDING CODE REQUIREMENTS AND WALL, FLOOR AND ROOF RATINGS.
8. ALL RATED WALL AND FLOOR PENETRATIONS SHALL BE SEALED AS REQUIRED IN SPECIFICATIONS.
9. REFERENCE CIVIL, PLUMBING, ELECTRICAL DRAWINGS. FIELD LOCATE UNDERGROUND LINES, MARK AND PROTECT AS NECESSARY. COORDINATE PROTECTION AND ANY AND ALL TEMPORARY DISRUPTIONS OF SERVICE WITH OWNER AS NECESSARY. PROVIDE ANY REQUIRED SHORING AND STRUCTURAL SUPPORTS OF PIPING AND CONDUITS AS REQUIRED. SCHEDULE WORK AND ANY REQUIRED INSPECTIONS TO MINIMIZE DISRUPTION OF SERVICE AS NECESSARY.
10. ALTHOUGH THE INTENT OF THE WORK IS SHOWN ON THE DRAWINGS, NOT EVERY FITTING OR ELBOW IS SHOWN & IT IS THE CONTRACTOR'S RESPONSIBILITY TO PROVIDE THE WORK NEEDED TO COMPLY WITH THE INTENT.
11. ALL DUCTWORK TO BE CROSS-BROKE OR BEADED. USE SMACNA STANDARDS AS MINIMUM REQUIREMENT FOR DUCTWORK.
12. EQUIPMENT SIZES AND SERVICE SPACE REQUIREMENTS MAY VARY BETWEEN DIFFERENT MANUFACTURES. CONSULT THE MANUFACTURER SUBMITTED AND APPROVED, AND COORDINATE WITH THESE DOCUMENTS.
13. INSTALL SEISMIC AND RESTRAINT BRACING FOR ALL PIPING, DUCTWORK, TANKS AND ALL OTHER EQUIPMENT SUBJECT TO STRUCTURAL DRAWINGS SEISMIC CRITERIA.

HVAC - MECHANICAL LEGEND

SYMBOL	DESCRIPTION
D	DRAIN
RS	REFRIGERANT SUCTION LINE
RL	REFRIGERANT LIQUID LINE
HG	REFRIGERANT HOT GAS LINE
	GATE VALVE
	BALL VALVE
	BUTTERFLY VALVE
G	GLOBE VALVE
	TRIPLE DUTY VALVE
	SWING CHECK VALVE
	STRAINER
	FLEX CONNECTOR
	HOSE END DRAIN VALVE
	PRESSURE REDUCING VALVE
	SAFETY RELIEF VALVE
	UNION
	MOTORIZED T.C. VALVE / 2-WAY
	MOTORIZED T.C. VALVE / 3-WAY
	ECCENTRIC PLUG BALANCING VALVE
	VALVE IN RISER
	TEE UP
	TEE DOWN

SYMBOL	DESCRIPTION
	ELBOW UP
	ELBOW DOWN
	PIPE SIZE CHANGE
M	MANUAL FLOW BALANCING VALVE (CIRCUIT SETTER)
A	AUTOMATIC FLOW BALANCING VALVE
	PIPE GUIDE
	PIPE ANCHOR
	PRESSURE / TEMP. TEST PLUG
T	DIAL THERMOMETER
	CONNECT NEW WORK TO EXISTING
P	PRESSURE GAUGE W/ SNUBBER
T	THERMOSTAT/TEMPERATURE SENSOR
T	THERMOSTAT/TEMPERATURE SENSOR W/ GUARD
	ACOUSTICALLY LINED SHEET METAL DUCT
	MANUAL BALANCING DAMPER
	FLEX CONNECTOR
AD AD	ACCESS DOORS
FD	FIRE DAMPER

SYMBOL	DESCRIPTION
F/SD	FIRE/SMOKE DAMPER
M	MOTORIZED DAMPER
	TURNING VANE ELBOW
	45° LOW-LOSS TAKE-OFF FITTING W/ DAMPER & FLEX DUCT
	45° LOW-LOSS TAKE-OFF FITTING W/ DAMPER & RIGID ROUND DUCT
	RECTANGULAR/ROUND DUCT WITH 45° HIGH EFFICIENCY TAKE-OFF
	SUPPLY DIFFUSER W/ FLEX DUCT, THROW PATTERN SHOWN ON PLANS
	LAY-IN SUPPLY DIFFUSER W/ FLEX DUCT, THROW PATTERN SHOWN ON PLANS
	RETURN GRILLE
	EXHAUST GRILLE
	DIFFUSER, REGISTER OR GRILLE
SD–1 (PLAN CODE) 200 (CFM)	
SD	SMOKE DETECTOR
C	COMMON
(E)	EXISTING
BDD	BACKDRAFT DAMPER

HVAC ABBREVIATIONS

AFF	ABOVE FINISHED FLOOR	HZ	FREQUENCY	PSIA	PSI ABSOLUTE
ACFM	ACTUAL CFM	GA	GAGE OR GAUGE	PD	PRESSURE DROP
AHU	AIR HANDLING UNIT	GAL	GALLONS	PSIG	PSI GAUGE
ANSI	AMERICAN NATIONAL STANDARDS INSTITUTE	G.C.	GENERAL CONTRACTOR	R/O	RUN OUT
AMP	AMPERE (AMP, AMPS)	GPH	GALLONS PER HOUR	RA	RETURN AIR
APD	AIR PRESSURE DROP	GPM	GALLONS PER MINUTE	RPM	REVOLUTIONS PER MINUTE
APPROX	APPROXIMATE	GPD	GALLONS PER DAY	SH	SENSIBLE HEAT
BHP	BRAKE HORSEPOWER, BOILER HORSEPOWER	HD	HEAD	SPEC	SPECIFICATION
BTU	BRITISH THERMAL UNIT	HGT	HEIGHT	SP VOL	SPECIFIC VOLUME
BOD	BOTTOM OF DUCT	HP	HORSEPOWER	STD	STANDARD
MBH	BTU PER HOUR (THOUSAND)	RH	HUMIDITY, RELATIVE	SP	STATIC PRESSURE
C	COMMON	KW	KILOWATT	SUCT	SUCTION
CU FT	CUBIC FEET	KWH	KILOWATT HOUR	SA	SUPPLY AIR
CU IN	CUBIC INCH	LAT	LEAVING AIR TEMPERATURE	TEMP	TEMPERATURE
CFM	CUBIC FEET PER MINUTE	LWT	LEAVING WATER TEMPERATURE	TD	TEMPERATURE DIFFERENCE
COD	CENTER OF DUCT	LF	LINEAR FEET	T STAT	THERMOSTAT
SCFM	CFM, STANDARD CONDITIONS	MAX	MAXIMUM	TOD	TOP OF DUCT
DB	DECIBEL	MC	MECHANICAL CONTRACTOR	TONS	TONS OF REFRIGERATION
DIA	DIAMETER	MIN	MINIMUM	TC	TEMPERATURE CONTROL
ID	DIAMETER, INSIDE	NO	NORMALLY OPEN	VAC	VACUUM
OD	DIAMETER, OUTER	NC	NORMALLY CLOSED	VAV	VARIABLE AIR VOLUME
DBT	DRY-BULB TEMPERATURE	N/A	NOT APPLICABLE	VEL	VELOCITY
EAT	ENTERING AIR TEMPERATURE	NIC	NOT IN CONTRACT	V	VOLT
EC	ELECTRICAL CONTRACTOR	NTS	NOT TO SCALE	VOL	VOLUME
EDR	EQUIVALENT DIRECT RADIATION	NO	NUMBER	VFD	VARIABLE FREQUENCY DRIVE
EXP	EXPANSION	OBD	OPPOSED BLADE DAMPER	WPD	WATER PRESSURE DROP
EWT	ENTERING WATER TEMPERATURE	OA	OUTSIDE AIR	W/	WITH
F	FAHRENHEIT	%	PERCENT		
FPM	FEET PER MINUTE	PH	PHASE (ELECTRICAL)		
FPS	FEET PER SECOND	LBS	POUNDS		
FT	FOOT OR FEET	PSI	POUNDS PER SQUARE INCH		

AMERICAN WATER
Military Services
Joint Base Lewis-McChord

BOWEN COLLINS & ASSOCIATES

Cushing Terrell
cushingterrell.com
800.757.9522

90% REVIEW

NOT FOR CONSTRUCTION
FOR REVIEW ONLY

NO.	DATE	REV. BY	DESCRIPTION

REVISIONS

AMERICAN WATER
WELL 13 REPLACEMENT
JBLM WASHINGTON

VERIFY SCALE
BAR IS ONE INCH ON ORIGINAL DRAWING

REVIEW
CHECKED L. RANKIN
APPROVED L. RANKIN

DESIGN
DESIGN L. RANKIN
DRAWN L. WILSON

HVAC
HVAC ABBREVIATIONS, LEGEND AND NOTES

PROJECT NUMBER 427-22-03
DATE: DECEMBER 2023

DRAWING NO.
H-01
SHEET 29 OF 60

L:\BCA_JBLM\MSDC\BIM\CAD\Mech\4272202_Well-13_H_01.dwg Plotted: 12/21/2023 3:47 PM By: Jeremy Wilson

LOUVER SCHEDULE

PLAN CODE	BASIS DESIGN	MODEL NO.	SERVICE	FRAME TYPE	W X H INCHES	CFM	BLADES	PRESSURE DROP (IN.W.C.)	MATERIAL	NOTES
LV-1	RUSKIN	ELF6375DX	INTAKE	BOX	32 x 16	350	DRAINABLE	0.05	ALUMINUM	1, 2
LV-2	RUSKIN	ELF6375DX	INTAKE	BOX	16 x 16	100	DRAINABLE	0.05	ALUMINUM	1, 2
LV-3	RUSKIN	ELF6375DX	INTAKE	BOX	16 X 16	100	DRAINABLE	0.05	ALUMINUM	1, 2

SCHEDULE NOTES:

1. PROVIDE LOUVER WITH BIRDSCREEN.
2. FACTORY PRIMED AND PAINTED IN NEUTRAL COLOR, LOUVERS TO BE PAINTED ON SITE.
3. SEE PLANS FOR DAMPER/DAMPER ACTUATOR REQUIREMENTS.

EXHAUST FAN SCHEDULE

PLAN CODE	BASIS OF DESIGN	MODEL NO.	DRIVE	CFM	RPM	E.S.P. (IN)	HP/WATTS	ELEC POWER (V/PH/HZ)	FAN TYPE	WEIGHT(LBS)	NOTES
EF-1	GREENHECK	AER-20	DIRECT	350	860	0.30	1/4HP	115/1/60	WALL PROP FAN		1, 2, 3, 4
EF-2	FANTECH	FR 125	DIRECT	110	2874	0.30	27 WATTS	115/1/60	INLINE DUCT	5	1
EF-3	FANTECH	FR 125	DIRECT	100	2874	0.30	27 WATTS	115/1/60	INLINE DUCT	5	1

SCHEDULE NOTES:

1. FAN SELECTIONS ARE AT 325FT ABOVE SEA LEVEL.
2. PROVIDE WEATHERHOOD, GALVANIZED 45DEG WITH BIRD SCREEN.
3. PROVIDE GRAVITY BACKDRAFT DAMPER MOUNTED AT WALL, SEE DETAIL.
4. PROVIDE WALL COLLAR WITH MOTOR SIDE GUARD AND CLOSURE AND MOUNTING ANGLES AS NECESSARY.

ELECTRIC HEATER SCHEDULE

PLAN CODE	LOCATION	BASIS OF DESIGN	MODEL	TYPE	WATTS/BTUH	CFM	POWER V/PH/HZ	TOTAL AMPS	WEIGHT	NOTES
EUH-1	MAIN ROOM	QMARK	MUH-03-81	UNIT HEATER	3000 / 10,200	350.0	208/1/60	14.5	30 LBS	1, 2
EUH-2	CHLORINE EQUIP.	QMARK	MUH-03-81	UNIT HEATER	3000 / 10,200	350.0	208/1/60	14.5	30 LBS	1, 2
EUH-3	FLUORIDE	QMARK	MUH-03-81	UNIT HEATER	3000 / 10,200	350.0	208/1/60	14.5	30 LBS	1, 2

SCHEDULE NOTES:

1. PROVIDE DOUBLE POLE, SINGLE THROW ON OFF SWITCH ON BACK BOX FOR DISCONNECT OF POWER SUPPLY.
2. PROVIDE MOUNTING BRACKETS TO HANG UNIT HEATER WITH CEILING OR WALL MOUNTED, WALL MOUNTED LOW VOLTAGE THERMOSTAT THREE POLE BUILT IN DISCONNECT SWITCH, AND TRANSFORMER FOR 24VOLT CONTROL.

AMERICAN WATER Military Services
Joint Base Lewis-McChord

BOWEN COLLINS & ASSOCIATES

Cushing Terrell
cushingterrell.com
800.757.9522

90% REVIEW

NOT FOR CONSTRUCTION FOR REVIEW ONLY

REVISIONS

NO.	DATE	REV. BY	DESCRIPTION

AMERICAN WATER
WELL 13 REPLACEMENT
JBLM WASHINGTON

VERIFY SCALE
BAR IS ONE INCH ON ORIGINAL DRAWING

REVIEW
CHECKED L. RANKIN
APPROVED L. RANKIN

DESIGN
DESIGN L. RANKIN
DRAWN L. WILSON

HVAC

HVAC SCHEDULES

PROJECT NUMBER 427-22-03

DATE: DECEMBER 2023

DRAWING NO.
H-02

SHEET 30 OF 60

L:\BCA_JBLM\BDC\BIM\CAD\Mech\4272202_Well-13_H_02.dwg Plotted: 12/21/2023 3:47 PM By: Jeremy Wilson

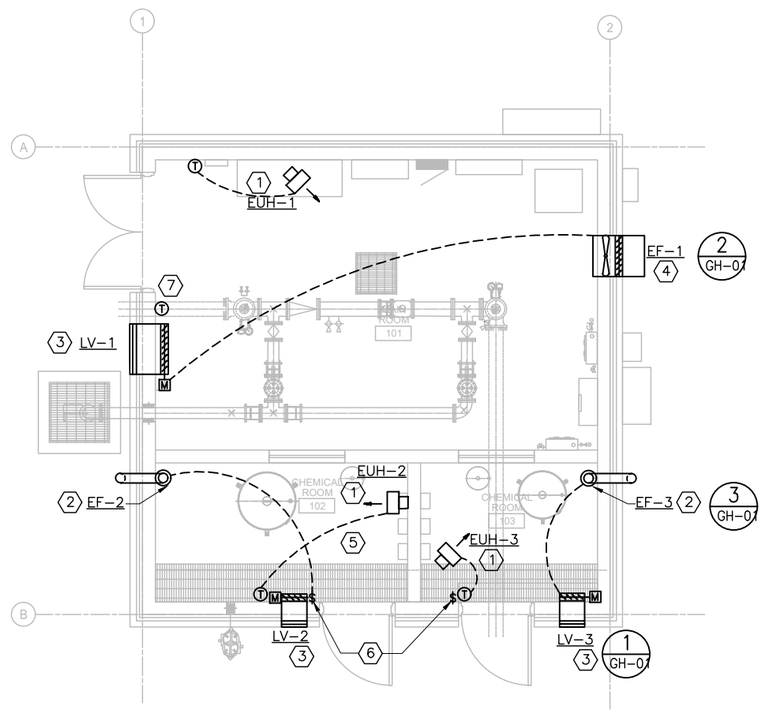

HVAC PLAN

SCALE: 1/4"=1'-0"

SHEET NOTES: ⟨#⟩

1. MOUNT BOTTOM OF UNIT HEATER AT 7 FT ABOVE FLOOR, SUPPORTED FROM THE WALL WITH SWIVEL BRACKET.
2. INSTALL INLINE FAN AT 6 FT ABOVE FLOOR. SEE DETAIL 3/GH-01 (TYPICAL).
3. INSTALL LOUVER ASSEMBLY, BOTTOM OF LOUVER AT 8 FT ABOVE FLOOR. PROVIDE OPEN/CLOSED MOTORIZED DAMPER WITH 120V-1PH ACTUATOR. DAMPER SHALL OPEN WHEN ASSOCIATED FAN IS OPERATING. SEE DETAIL 1/GH-01.
4. INSTALL WALL FAN AT 7'-0" TO BOTTOM OF FAN. SEE DETAIL 2/GH-01.
5. ALL DUCTWORK, PIPING AND COMPONENTS INSTALLED IN OR EXPOSED IN CHLORINE ROOM ENVIRONMENT SHALL BE RESISTANT TO CORROSION AND CAPABLE OF OPERATION IN CHLORINE CONCENTRATION WITHOUT DAMAGE.
6. WALL SWITCH TO TURN ON ROOM EXHAUST FAN, SEE ELECTRICAL DRAWINGS FOR WALL SWITCH.
7. PROVIDE THERMOSTAT ON WALL TO OPERATE EXHAUST FAN EF-1 WHEN TEMPERATURE RISES IN ROOM.

AMERICAN WATER Military Services
Joint Base Lewis-McChord

BOWEN COLLINS & ASSOCIATES

Cushing Terrell
cushingterrell.com
800.757.9522

90% REVIEW

NOT FOR CONSTRUCTION
FOR REVIEW ONLY

NO.	DATE	REV. BY	DESCRIPTION

REVISIONS

AMERICAN WATER
WELL 13 REPLACEMENT
JBLM WASHINGTON

VERIFY SCALE
BAR IS ONE INCH ON ORIGINAL DRAWING

REVIEW
CHECKED L. RANKIN
APPROVED L. RANKIN

DESIGN
DESIGN L. RANKIN
DRAWN J. WILSON

HVAC
HVAC PLAN

PROJECT NUMBER 427-22-03
DATE: DECEMBER 2023

DRAWING NO.
H-03

SHEET 31 OF 60

L:\BCA_JBLM\SDC\BIMCAD\Mech\4272202_Well-13_H_03.dwg Plotted: 12/21/2023 4:43 PM By: Laura Rankin

LEGEND

SYMBOL	LIGHTING
	RECESSED TROFFER
	WALL MOUNTED LINEAR FIXTURE
	SURFACE MOUNTED LINEAR FIXTURE
	SUSPENDED LINEAR FIXTURE
	SHADED FIXTURE INDICATES EMERGENCY BALLAST
	RECESSED DOWNLIGHT
	WALL MOUNTED FIXTURE
	POLE MOUNTED AREA LIGHT
	WALL MOUNT EXIT LIGHT (W/ DIRECTIONAL ARROWS)
	SURFACE MOUNTED DOWNLIGHT
	EMERGENCY WALL LIGHT, SINGLE
	EMERGENCY WALL LIGHT, DOUBLE

SYMBOL	DEVICES & POWER
$3	SWITCH – SPST 3 THREE WAY 4 FOUR WAY WP WEATHER PROOF EXP EXPLOSION PROOF M MANUAL MOTOR DISCONNECT/STARTER T TIMER MC MOMENTARY CONTACT HC HANDICAPPED
	RECEPTACLE – SIMPLEX
GFI WP	RECEPTACLE – DUPLEX GFI GROUND FAULT INTERRUPT WP WEATHER RESISTANT DEVICE W/ WHILE-IN-USE COVER
	RECEPTACLE – DOUBLE DUPLEX SAME INDICATORS AS SHOWN FOR DUPLEX
J J	J-BOX, J-BOX WALL MOUNTED, 4"x4"x2 1/8" DEEP UNLESS NOTED OTHERWISE
T	J-BOX, CONDUIT, PULL STRING BY EC THERMOSTAT, SUPPLIED AND INSTALLED BY MC
PP	POWER POLE
	LCS (LOCAL CONTROL STATION)
	EMERGENCY PUSHBUTTON
PC	PHOTOCELL
	SPECIAL PURPOSE CONNECTION, BOX INDICATES FLOOR MOUNTING, WORK AS NOTED PANELBOARD, MOUNTING AS INDICATED ON PANEL SCHEDULE
	COMBINATION STARTER
	DISCONNECT SWITCH
	CONTACTOR
	CIRCUIT BREAKER
	TRANSFORMER, DRY-TYPE
	TRANSFORMER, PAD MOUNTED

SYMBOL	GROUNDING
	GROUND ROD
	GROUND ROD WITH GROUND TEST WELL
	GROUND RISER FROM REBAR
	MECHANICALLY CRIMPED OR WELDED GROUND CONNECTIONS
	GROUND CABLE: EMBEDDED IN CONCRETE BURIED IN EARTH EXPOSED

SYMBOL	SCHEMATIC
	SELECTOR SWITCH 2 POSITION
TR	NORMALLY OPEN TIME DELAY CLOSING AFTER COIL ENERGIZED
TR	NORMALLY CLOSED TIME DELAY OPENING AFTER COIL ENERGIZED
W	INDICATOR LIGHT
	REMOTE DEVICE CONNECTION
	CLOSED RELAY CONTACT
	OPEN RELAY CONTACT
	TERMINAL TO EXTERNAL REMOTE DEVICE
	WIRE TERMINAL OR CONNECTION POINT
	LIMIT SWITCH
CR	CONTROL RELAY
	VT/PT CPT
HAND OFF AUTO	SELECTOR SWITCH 3 POSITION MAINTAINED CONTACT
	LEVEL SWITCH CLOSES ON FALLING LEVEL
	LEVEL SWITCH CLOSES ON RISING LEVEL
	CONTROL SWITCH PUSHBUTTON, MOMENTARY CONTACT N.C.
	GROUND CONNECTION
	SOLENOID
	FLOW SWITCH CLOSES ON LOW FLOW
	PRESSURE SWITCH CLOSES ON RISING PRESSURE
	TRANSFORMER W/ DELTA-Y AND GROUND
M	UTILITY METER, UTILITY CT
	CIRCUIT BREAKER
	ELECTRICAL PANEL
	FUSE
2	MOTOR STARTER NEMA SIZE AS NOTED
	DISCONNECT SWITCH SIZE AS NOTED
AHF	ACTIVE HARMONIC FILTER
PHF	PASSIVE HARMONIC FILTER
M	MOTOR (10 HORSEPOWER NOTED)
SPD	SURGE PROTECTION DEVICE
PQM	POWER QUALITY METER
VFD	VARIABLE FREQUENCY DRIVE
PMR	PUMP MONITOR RELAY
RVSS	REDUCED VOLTAGE SOFT STARTER
dV/dt	dV/dt FILTER

CIRCUITING SYMBOLS

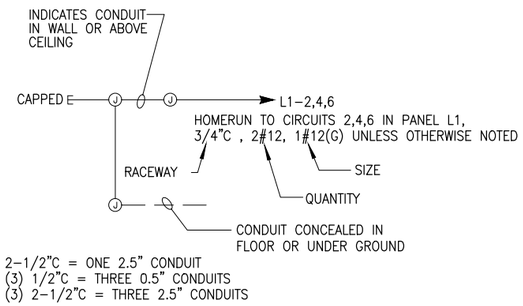

INTERIOR BOX MOUNTING HEIGHTS

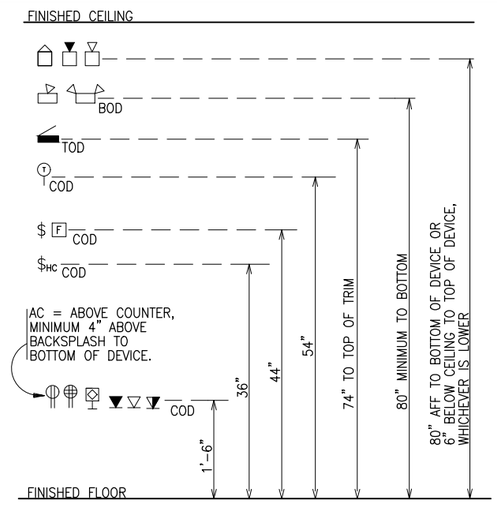

SYMBOL	ABBREVIATIONS AND MISCELLANEOUS
ATS	AUTOMACTIC TRANSFER SWITCH
EC	ELECTRICAL CONTRACTOR
MC	MECHANICAL CONTRACTOR
GC	GENERAL CONTRACTOR
C	CONDUIT
GND, G	GROUND
BOD	BOTTOM OF DEVICE
COD	CENTER OF DEVICE
AFF	ABOVE FINISHED FLOOR
AFG	ABOVE FINISHED GRADE
BLG	BELOW GRADE
AC	ABOVE COUNTER, 4" ABOVE BACK SPLASH
BC	BELOW COUNTER, 4" BELOW COUNTER TOP
W/	WITH
a,b,c	SWITCH DESIGNATION
UON	UNLESS OTHERWISE NOTED
UG	UNDERGROUND
WP	WEATHER PROOF
FO	FIBER OPTIC
MD	MEDIUM VOLTAGE
X / X	INDICATES STANDARD DETAIL
XXX	EQUIPMENT TAG NUMBER
X,XXX	FAULT CURRENT VALUE
XXX	CONDUIT TAG

GENERAL NOTES:

1. VERIFY ALL EQUIPMENT DIMENSIONS AND LOCATIONS BEFORE BEGINNING ROUGH-IN. CONSULT ALL APPLICABLE CONTRACT DRAWINGS AND SHOP DRAWINGS TO ENSURE NEC CODE CLEARANCE REQUIRED AROUND ALL ELECTRICAL EQUIPMENT.
2. CONTRACTOR SHALL VERIFY ALL ELECTRICAL LOADS (VOLTAGE, PHASE, CONNECTION REQUIREMENTS, ETC.) OF EQUIPMENT FURNISHED BEFORE BEGINNING ROUGH-IN.
3. SEE APPLICABLE SHOP DRAWINGS FOR ROUGH-IN LOCATION OF ALL EQUIPMENT, WIRING DEVICES, ETC.
4. THE ELECTRICAL CONTRACTOR SHALL NOTIFY AND COOPERATE WITH THE MECHANICAL CONTRACTOR SUCH THAT NO PIPING, OR EQUIPMENT FOREIGN TO THE OPERATION OF THE ELECTRICAL EQUIPMENT SHALL BE PERMITTED TO BE INSTALLED IN, ENTER OR PASS THROUGH ELECTRICAL ROOMS OR SPACES; OR ABOVE OR BELOW ELECTRICAL EQUIPMENT IN THE OTHER AREAS.
5. ALL PENETRATIONS OF FLOORS, WALLS AND CEILINGS SHALL BE SEALED WITH APPROVED MATERIAL.
6. FOR PACKAGE EQUIPMENT PROVIDED ON THE PROJECT, SOME CONDUITS AND WIRES ARE SHOWN ON THE DRAWINGS, BUT IT IS EXPECTED THAT SOME ADDITIONAL CONDUITS AND WIRES MAY BE REQUIRED BY EQUIPMENT MANUFACTURERS TO COMPLETE INSTALLATION. IT IS INCUMBENT UPON THE GENERAL CONTRACTOR TO COORDINATE THIS REQUIREMENT WITH HIS SUBCONTRACTORS TO MAKE SURE THAT EQUIPMENT SUPPLIER PROVIDED ALL NECESSARY ELECTRICAL INFORMATION TO ELECTRICAL SUBCONTRACTOR FOR INCLUSION WHETHER SHOWN OR NOT SHOWN ON THE DRAWINGS.
7. IF OTHER THAN FIRST NAMED EQUIPMENT IS USED, IT SHALL BE CAREFULLY CHECKED FOR ELECTRICAL REQUIREMENTS AND CONTROL REQUIREMENTS OF ALTERNATE EQUIPMENT. SHOULD CHANGES OR ADDITIONS OCCUR IN ELECTRICAL WORK, OR THE WORK OF OTHER CONTRACTORS BE REVISED BY THE ALTERNATE EQUIPMENT, THE COST OF ALL CHANGES SHALL BE THE RESPONSIBILITY OF THE ELECTRICAL CONTRACTOR.
8. IT IS THE ELECTRICAL SUBCONTRACTOR'S RESPONSIBILITY TO RECEIVE THE COMPLETE SET OF PLANS IN ORDER TO ENSURE THAT ALL ITEMS RELATED TO ELECTRICAL POWER AND CONTROL SYSTEMS ARE COMPLETELY ACCOUNTED FOR.
9. ALL EQUIPMENT DIMENSIONS SHOWN ON PLANS AND ELEVATIONS ARE APPROXIMATE ONLY. THE CONTRACTOR SHALL USE THE SHOP DRAWINGS FOR PROPER LAYOUT, FOUNDATION AND PAD, ETC. FOR FINAL INSTALLATION WITHOUT ANY ADDITIONAL COST TO THE OWNER.
10. THE DRAWINGS GENERALLY ILLUSTRATE THE APPROXIMATE DESIRED LOCATION AND ARRANGEMENT OF OUTLETS, CONDUIT RUNS, EQUIPMENT AND OTHERS ITEMS. DETERMINE EXACT LOCATIONS IN THE FIELD BASED ON PHYSICAL SIZE AND ARRANGEMENT OF EQUIPMENT, FINISHED ELEVATIONS, EASEMENT LOCATIONS, AND OTHER OBSTRUCTIONS. LOCATIONS SHOWN ON THE DRAWINGS, HOWEVER, SHALL BE ADHERED TO AS CLOSELY AS POSSIBLE.
11. THE ELECTRICAL INSTALLATION SHALL COMPLY WITH THE CURRENT VERSION OF THE NEC, LOCAL, AND STATE CODES.

AMERICAN WATER
Military Services
Joint Base Lewis-McChord

BOWEN COLLINS & ASSOCIATES

90% REVIEW

NOT FOR CONSTRUCTION
FOR REVIEW ONLY

NO.	DATE	REV. BY	DESCRIPTION

REVISIONS

AMERICAN WATER (P4-A60MWA2-00002)
WELL 13 REPLACEMENT
FOR AMERICAN WATER MILITARY SERVICES

VERIFY SCALE
BAR IS ONE INCH ON ORIGINAL DRAWING

REVIEW
CHECKED D. YOUNGSTROM
APPROVED D. YOUNGSTROM

DESIGN
DESIGN J. LAKE
DRAWN J. LAKE

ELECTRICAL

ELECTRICAL LEGEND AND NOTES

DATE: DECEMBER 2023
PROJECT NUMBER 427-22-02

DRAWING NO.
E-01

SHEET 32 OF 60

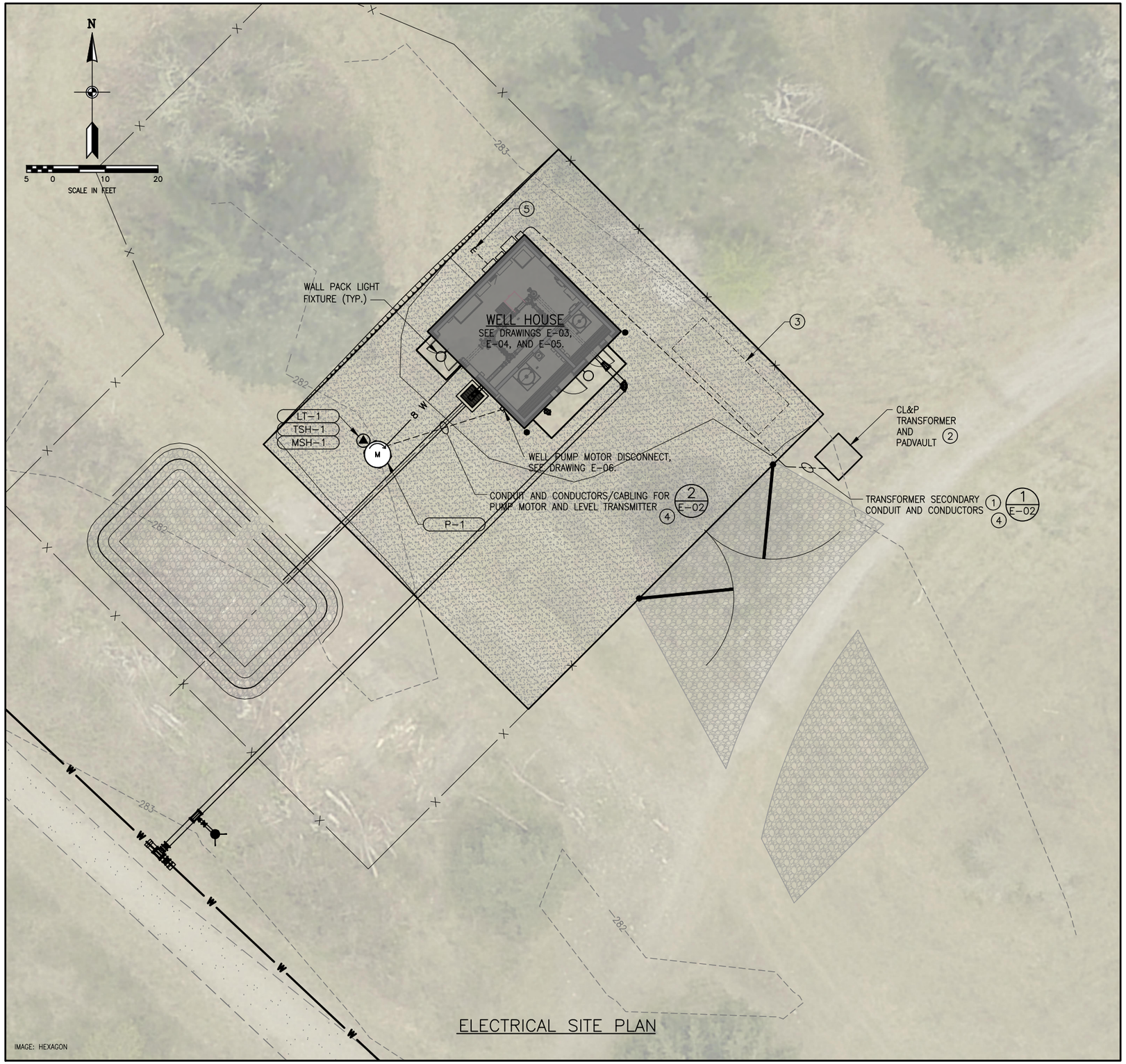

ELECTRICAL SITE PLAN

GENERAL NOTES:

A. FOR EQUIPMENT LOCATIONS, SEE ELECTRICAL FLOOR PLANS ON DRAWINGS E-03 – E-05. FOR CONDUIT AND CONDUCTOR SIZES, SEE POWER ONE-LINE ON DRAWING E-06, LOAD SUMMARY AND PANEL SCHEDULE ON DRAWING E-07, AND CONTROL BLOCK DIAGRAM ON DRAWINGS E-08 AND E-09.

B. FOR ALL CONDUIT PENETRATIONS THRU WALL, SEE (E/5012) AND SPECIFICATIONS. SEE SPECIFICATIONS FOR ALL CONDUIT PENETRATIONS THRU SLAB.

KEY NOTES: (#)

1. PROVIDE AND INSTALL CONDUITS AND CONDUCTORS. PROVIDE TRENCH, BACKFILL, AND COMPACTION. FOR QUANTITY AND SIZE OF CONDUITS AND ADDITIONAL INFORMATION, SEE POWER ONE-LINE DIAGRAM ON DRAWING E-06.
2. PROVIDED AND INSTALLED BY CITY LIGHT & POWER.
3. SPACE RESERVED FOR FUTURE STANDBY GENERATOR.
4. SEE DETAIL (E/5010).
5. LOCATION OF STUBBED AND CAPPED CONDUITS FOR FUTURE GENERATOR CONNECTIONS. SEE POWER ONE-LINE ON DRAWING E-06, PANEL SCHEDULE ON E-07, AND CONTROL BLOCK DIAGRAM ON DRAWING E-08.

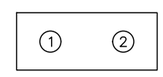

1. 3" TRANSFORMER SECONDARY POWER
2. 3" TRANSFORMER SECONDARY POWER

CONDUIT DUCTBANK SECTION (1/E-02)
NTS

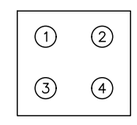

1. 2" P-1 POWER
2. 1" LT-1 SIGNAL
3. 2" P-1 POWER
4. 1" TSH-1 AND MSH-1 CONTROLS

CONDUIT DUCTBANK SECTION (2/E-02)
NTS

AMERICAN WATER
Military Services
Joint Base Lewis-McChord

BOWEN COLLINS & ASSOCIATES

90% REVIEW

NOT FOR CONSTRUCTION
FOR REVIEW ONLY

NO.	DATE	REV. BY	DESCRIPTION

REVISIONS

AMERICAN WATER (P4-A60MWA2-00002)
WELL 13 REPLACEMENT
FOR AMERICAN WATER MILITARY SERVICES

VERIFY SCALE
BAR IS ONE INCH ON ORIGINAL DRAWING

REVIEW
CHECKED D. YOUNGSTROM
APPROVED D. YOUNGSTROM

DESIGN
DESIGN J. LAKE
DRAWN J. LAKE

ELECTRICAL
ELECTRICAL SITE PLAN

PROJECT NUMBER 427-22-02
DATE: DECEMBER 2023

DRAWING NO.
E-02

SHEET 33 OF 60

P:\American Water\427-22-01, 02, 03 JBLM Wells\2.0 Design Phase\2.9 Drawings\sht\Well 13\4272202_E-02.dwg Plotted: 1/11/2024 9:19 AM By: Troy Tanner

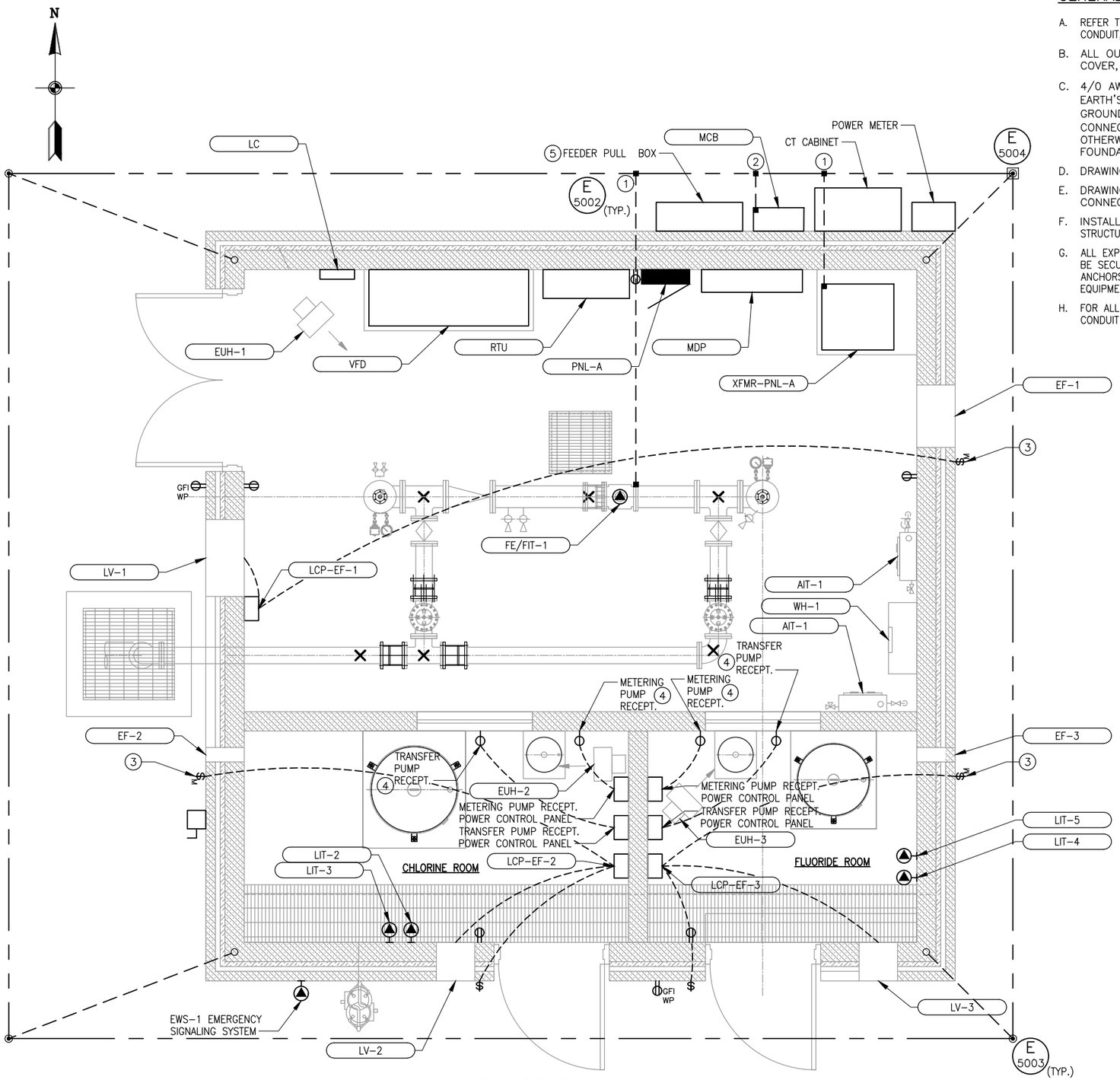

POWER PLAN

SCALE: 1/2" = 1'-0"

GENERAL NOTES:

A. REFER TO POWER ONE-LINE DIAGRAM ON DRAWING E-06 AND LOAD SUMMARY ON DRAWING E-07 FOR CONDUIT, CONDUCTORS, AND ELECTRICAL EQUIPMENT INFORMATION.

B. ALL OUTSIDE GFCI OUTLETS ARE WEATHER-RESISTANT WITH WHILE-IN-USE WEATHER PROOF COVER, HUBBELL, METALLIC WP26E OR WP26EH.

C. 4/0 AWG BARE COPPER GROUND RING SHALL BE BURIED NOT LESS THAN 36" BELOW THE EARTH'S SURFACE. CONNECT REBAR TO THE GROUND RING VIA 4/0 AWG BARE COPPER GROUND CABLE (GROUND RISERS). EQUIPMENT AND MISCELLANEOUS METALWORK SHALL BE CONNECTED TO THE GROUND RING WITH 4/0 AWG BARE COPPER GROUND CABLE UNLESS OTHERWISE NOTED. THE GROUND RING SHALL BE A MINIMUM OF 6 FEET FROM BUILDING FOUNDATION. REFER TO GROUNDING PLAN SYMBOLS ON DRAWING E-01.

D. DRAWING SHOWS TYPICAL LOCATIONS OF GROUNDING SYSTEM COMPONENTS.

E. DRAWING SHOWS APPROXIMATE LOCATIONS AND MINIMUM NUMBER OF RISERS GROUNDING CONNECTIONS TO BE INSTALLED.

F. INSTALL HOUSEKEEPING PAD UNDER ALL FLOOR MOUNTED ELECTRICAL EQUIPMENT. SEE STRUCTURAL DRAWINGS FOR DETAIL.

G. ALL EXPOSED CONDUIT IN THE CHLORINE AND FLUORIDE ROOMS SHALL BE SCHEDULE 80 PVC. CONDUIT SHALL BE SECURED TO THE WALL USING FIBERGLASS STRUT AND CLAMPS, NYLON BOLTS, AND STAINLESS STEEL WALL ANCHORS. ENCLOSURES IN THESE SPACES SHALL BE NON-METALLIC NEMA 4X. ALL INSTRUMENT AND EQUIPMENT LABELS IN THESE SPACES SHALL BE ENGRAVED ALUMINUM.

H. FOR ALL CONDUIT PENETRATIONS THRU WALL, SEE (E 5012) AND SPECIFICATIONS. SEE SPECIFICATIONS FOR ALL CONDUIT PENETRATIONS THRU SLAB.

KEY NOTES: (#)

1. CONNECT TO GROUND RING WITH #2 AWG BARE COPPER GROUND CABLE.
2. CONNECT TO GROUND RING WITH 4/0 BARE COPPER GROUND CABLE.
3. PROVIDE AND INSTALL MOTOR RATED SNAP SWITCH DISCONNECT MOUNTED UP HIGH NEAR EXHAUST FAN. SNAP SWITCH DISCONNECT SHALL BE PROVIDED WITH LOCKABLE, WEATHERPROOF COVER.
4. COORDINATE FINAL LOCATION OF RECEPTACLE IN FIELD.
5. SEE POWER ONE-LINE DIAGRAM ON DRAWING E-06 FOR MORE INFORMATION.

AMERICAN WATER
Military Services
Joint Base Lewis-McChord

BOWEN COLLINS & ASSOCIATES

90% REVIEW

NOT FOR CONSTRUCTION
FOR REVIEW ONLY

NO.	DATE	REV. BY	DESCRIPTION

REVISIONS

AMERICAN WATER (P4-A60MWA2-00002)
WELL 13 REPLACEMENT
FOR AMERICAN WATER MILITARY SERVICES

VERIFY SCALE
BAR IS ONE INCH ON ORIGINAL DRAWING

REVIEW
CHECKED D. YOUNGSTROM
APPROVED D. YOUNGSTROM

DESIGN
DESIGN J. LAKE
DRAWN J. LAKE

ELECTRICAL
POWER AND GROUNDING PLAN

PROJECT NUMBER 427-22-02
DATE: DECEMBER 2023

DRAWING NO.
E-03

SHEET 34 OF 60

P:\American Water\427-22-01, 02, 03 JBLM Wells\2.0 Design Phase\2.9 Drawings\shf\Well 13\427220 2_E-03.dwg Plotted: 1/11/2024 9:05 AM By: Troy Tanner

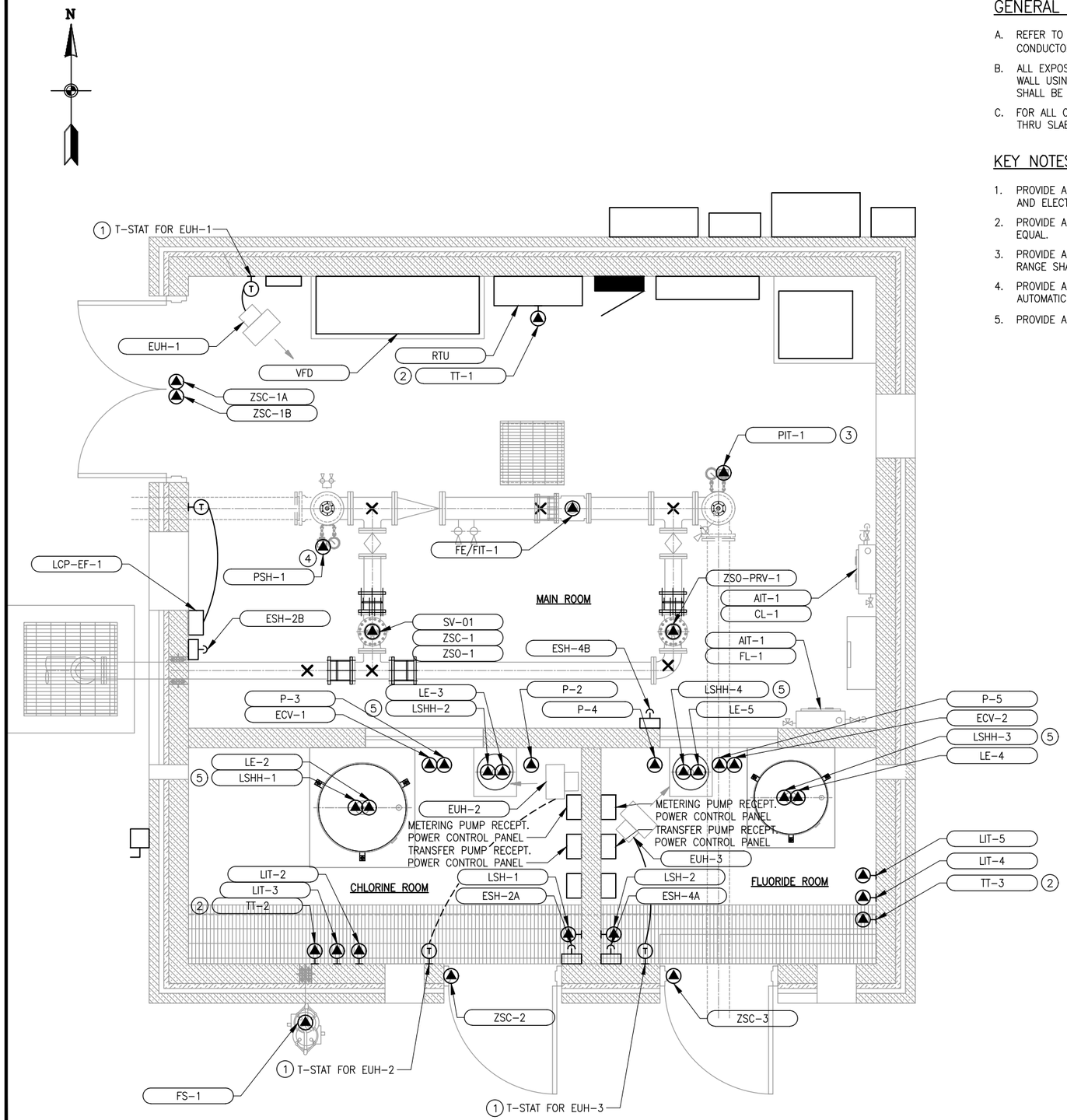

CONTROLS PLAN

SCALE: 1/2" = 1'-0"

GENERAL NOTES:

A. REFER TO CONTROL ONE-LINE DIAGRAM ON DRAWINGS E-08 AND E-09 FOR INFORMATION REGARDING CONDUIT AND CONDUCTORS/CABLING.

B. ALL EXPOSED CONDUIT IN THE CHLORINE AND FLUORIDE ROOMS SHALL BE SCHEDULE 80 PVC. CONDUIT SHALL BE SECURED TO THE WALL USING FIBERGLASS STRUT AND CLAMPS, NYLON BOLTS, AND STAINLESS STEEL WALL ANCHORS. ENCLOSURES IN THESE SPACES SHALL BE NON-METALLIC NEMA 4X. ALL INSTRUMENT AND EQUIPMENT LABELS IN THESE SPACES SHALL BE ENGRAVED ALUMINUM.

C. FOR ALL CONDUIT PENETRATIONS THRU WALL, SEE (E / 5012) AND SPECIFICATIONS. SEE SPECIFICATIONS FOR ALL CONDUIT PENETRATIONS THRU SLAB.

KEY NOTES: (#)

1. PROVIDE AND INSTALL (1) 3/4" C W/ MANUFACTURER'S CABLE OR MANUFACTURER'S RECOMMENDED CABLE BETWEEN T-STAT AND ELECTRIC UNIT HEATER.
2. PROVIDE AND INSTALL DWYER BTT-N00-3 WALL MOUNT TEMPERATURE TRANSMITTER WITH 4-20mA OUTPUT OR APPROVED EQUAL.
3. PROVIDE AND INSTALL KELLER PRECISELINE HIGH ACCURACY DUEL OUTPUT PRESSURE TRANSMITTER OR APPROVED EQUAL. RANGE SHALL BE 0-150 PSI. CONFIRM RANGE WITH OWNER AND OPERATOR BEFORE PURCHASING.
4. PROVIDE AND INSTALL PRESSURE SWITCH. RANGE SHALL BE 0-150 PSI. SET TO TRIP ON RISING PRESSURE 95 PSI, AUTOMATIC RESET. CONFIRM RANGE AND TRIP VALUES WITH OWNER AND OPERATOR BEFORE PURCHASING.
5. PROVIDE AND INSTALL FLOWLINE SWITCH-TEK LU10 (P/N LU10-1305) OR APPROVED EQUAL.

AMERICAN WATER
Military Services
Joint Base Lewis-McChord

BOWEN COLLINS & ASSOCIATES

90% REVIEW

NOT FOR CONSTRUCTION
FOR REVIEW ONLY

NO.	DATE	REV. BY	DESCRIPTION

REVISIONS

AMERICAN WATER (P4-A60MWA2-00002)
WELL 13 REPLACEMENT
FOR AMERICAN WATER MILITARY SERVICES

VERIFY SCALE
BAR IS ONE INCH ON ORIGINAL DRAWING

REVIEW
CHECKED D. YOUNGSTROM
APPROVED D. YOUNGSTROM

DESIGN
DESIGN J. LAKE
DRAWN J. LAKE

ELECTRICAL
CONTROLS PLAN

PROJECT NUMBER 427-22-02
DATE: DECEMBER 2023

DRAWING NO.
E-04

SHEET 35 OF 60

P:\AMERICAN WATER\427-22-01, 02, 03 JBLM WELLS\2.0 DESIGN PHASE\2.9 DRAWINGS\SHT\WELL 13\427220 2_E-04.dwg Plotted: 1/10/2024 10:35 AM By: Cameron Wasden

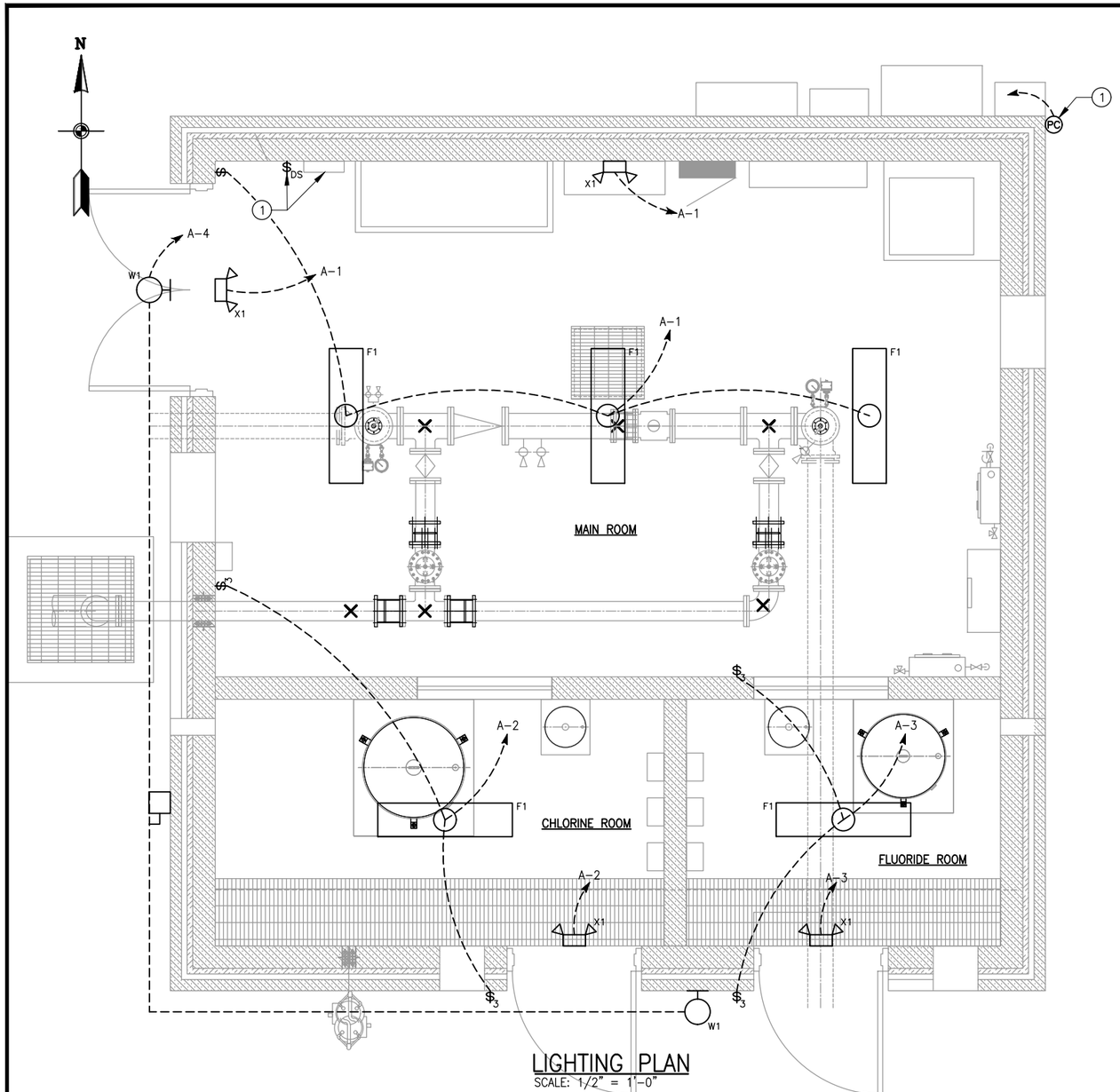

LIGHTING PLAN

SCALE: 1/2" = 1'-0"

GENERAL NOTES:

A. REFER TO PANEL SCHEDULE ON DRAWING E-06 FOR CONDUIT AND CONDUCTOR SIZES.

B. EMERGENCY FIXTURES TO HAVE UNSWITCHED "HOT" FROM SAME CIRCUIT AS NORMAL LIGHTING.

C. ALL EXPOSED CONDUIT IN THE CHLORINE AND FLUORIDE ROOMS SHALL BE SCHEDULE 80 PVC. CONDUIT SHALL BE SECURED TO THE WALL USING FIBERGLASS STRUT AND CLAMPS, NYLON BOLTS, AND STAINLESS STEEL WALL ANCHORS. ENCLOSURES IN THESE SPACES SHALL BE NON-METALLIC NEMA 4X. ALL INSTRUMENT AND EQUIPMENT LABELS IN THESE SPACES SHALL BE ENGRAVED ALUMINUM.

D. FOR ALL CONDUIT PENETRATIONS THRU WALL, SEE (E / 5012) AND SPECIFICATIONS. SEE SPECIFICATIONS FOR ALL CONDUIT PENETRATIONS THRU SLAB.

KEY NOTES: (#)

1. EXTERIOR LIGHTING CONTROL PANEL, DIGITAL SWITCH, AND PHOTOCELL. SEE DETAIL BELOW. MOUNT PHOTOCELL UNDER SOFFIT AND ADJUST TO 1 FOOTCANDLE.
2. SEE ARCHITECTURAL DRAWINGS FOR MOUNTING HEIGHT OF ALL W1 FIXTURES.
3. MOUNT ALL X1 FIXTURES AT 8'-0" A.F.F.

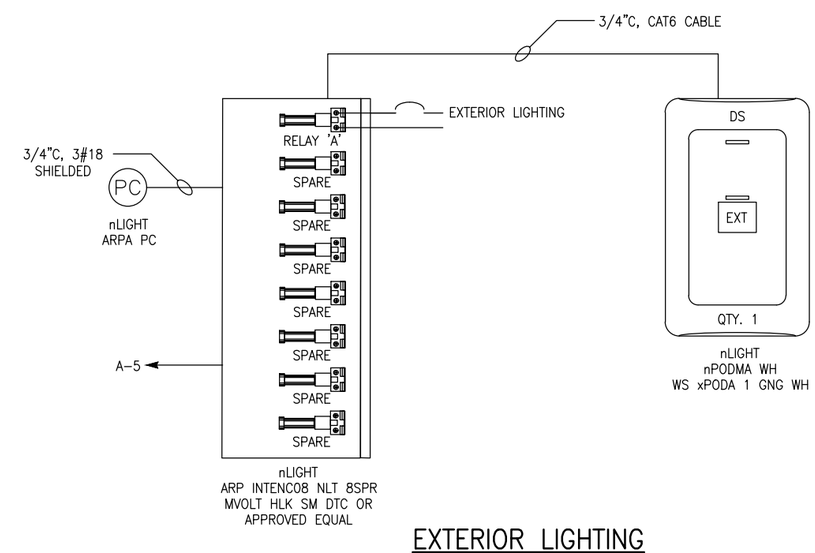

EXTERIOR LIGHTING CONTROL SCHEMATIC

FIXTURE SCHEDULE

SYMBOL	DESCRIPTION	MANUFACTURER	CATALOG NO.	VA	LAMP	MOUNTING	NOTES
F1	LINEAR ROUGH SERVICE, LED	LITHONIA	VAP 6000LM FST MD MVOLT GZ10 40K 80CRI QMB	49	LED	SURFACE	
W1	LED EMERGENCY LIGHT	LITHONIA	ELM2LM12	1.09	LED	WALL	2
X1	WALL PACK	LITHONIA	WPX1 LED P2 40K MVOLT DDBXD	24	LED	WALL	3

AMERICAN WATER
Military Services
Joint Base Lewis-McChord

BOWEN COLLINS & ASSOCIATES

90% REVIEW

NOT FOR CONSTRUCTION
FOR REVIEW ONLY

REVISIONS

NO.	DATE	REV. BY	DESCRIPTION

AMERICAN WATER (P4-A60MWA2-00002)
WELL 13 REPLACEMENT
FOR AMERICAN WATER MILITARY SERVICES

VERIFY SCALE
BAR IS ONE INCH ON ORIGINAL DRAWING

REVIEW
CHECKED D. YOUNGSTROM
APPROVED D. YOUNGSTROM

DESIGN
DESIGN J. LAKE
DRAWN J. LAKE

ELECTRICAL

LIGHTING PLAN

PROJECT NUMBER 427-22-02

DATE: DECEMBER 2023

DRAWING NO.
E-05

SHEET 36 OF 60

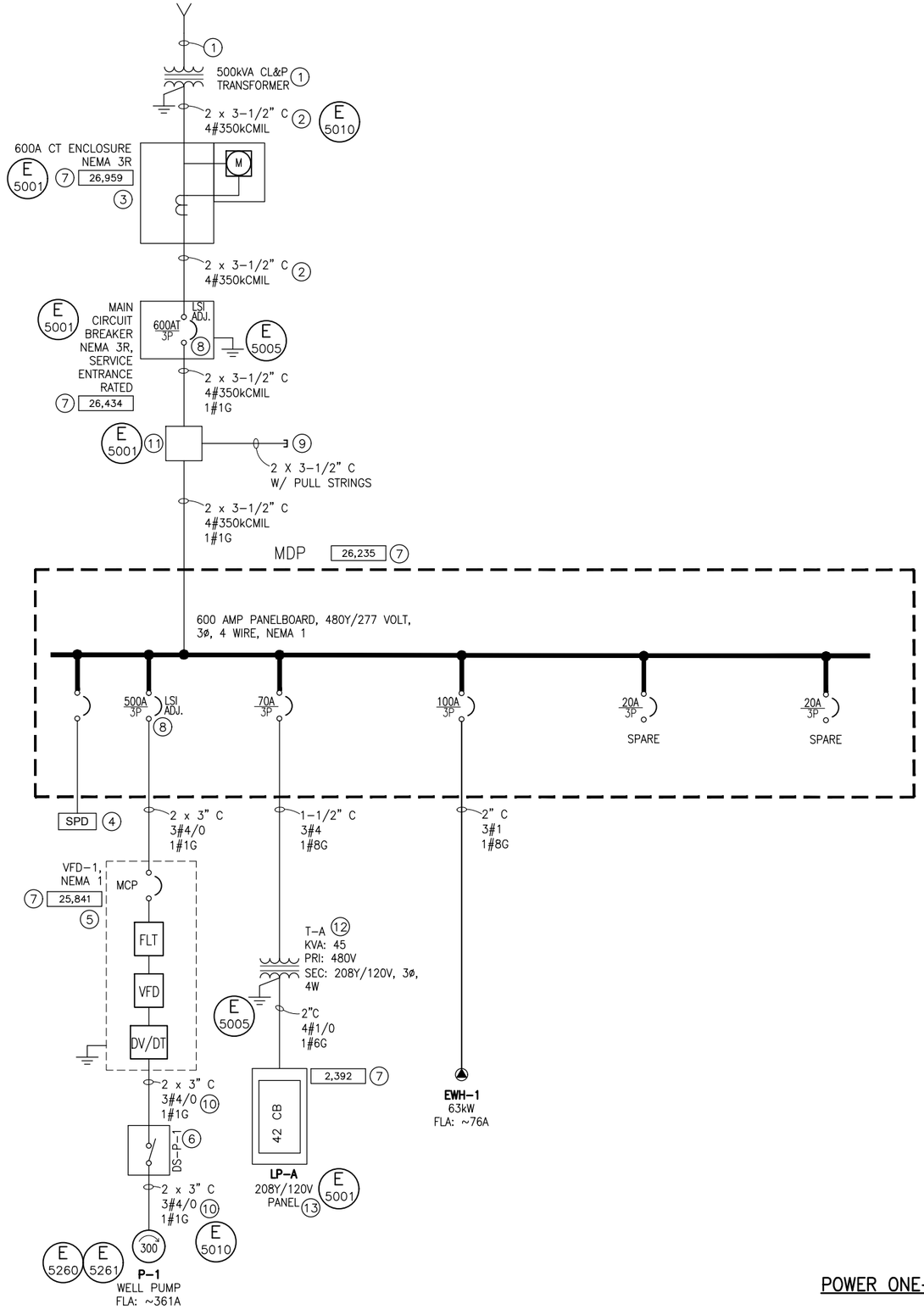

POWER ONE-LINE DIAGRAM

GENERAL NOTES:

A. FOR EQUIPMENT LOCATIONS, SEE ELECTRICAL SITE PLAN AND POWER PLAN ON DRAWINGS E-02 AND E-03.

B. REFER TO LOAD SUMMARY AND PANEL SCHEDULE ON DRAWING E-07.

C. CONTRACTOR RESPONSIBLE TO PROVIDE QUANTITIES AND SIZES OF LUGS FOR ALL EQUIPMENT MATCHING QUANTITIES AND SIZES OF CABLES SHOWN ON THE ONE-LINE DIAGRAM.

D. DESIGN IS BASED ON MINIMUM WELL PUMP HORSEPOWER RATING SHOWN ON POWER ONE-LINE DIAGRAM. SHOULD CONTRACTOR SELECT HIGHER HORSEPOWER PUMP MOTOR, CONTRACTOR SHALL NOTIFY ENGINEER AND SHALL BE RESPONSIBLE FOR ALL REQUIRED CHANGES (INCLUDING UPSIZING WIRE, CONDUIT, VFD, DISTRIBUTION PANELBOARD, ETC.).

E. ARC FLASH AND POWER SYSTEM STUDY SHALL BE PROVIDED, AND ARC FLASH LABELS SHALL BE APPLIED ONCE THE STUDY IS COMPLETED AND APPROVED.

KEY NOTES: (#)

1. PRIMARY SERVICE BY CITY LIGHT & POWER (CL&P). PRIMARY CONDUIT AND CABLING, TRANSFORMER, AND PADVAULT PROVIDED AND INSTALLED BY CL&P.
2. CONTRACTOR SHALL PROVIDE TRENCH, BACKFILL, AND COMPACTION. CONTRACTOR SHALL PROVIDE AND INSTALL SECONDARY CONDUIT AND CONDUCTORS. ALL WORK SHALL BE DONE IN ACCORDANCE WITH CL&P REQUIREMENTS.
3. CONTRACTOR SHALL PROVIDE AND INSTALL CT CABINET, METER BASE, CONDUIT BETWEEN THEM, AND GROUNDING AND BONDING OF ALL EQUIPMENT. COORDINATE ALL EQUIPMENT, CT'S, AND CT CABLING W/ OWNER.
4. PROVIDE AND INSTALL EXTERNAL SURGE PROTECTIVE DEVICE (SQUARE D P/N SSP04EMA24 OR APPROVED EQUAL). OCPD IN AND BRANCH CONDUCTORS FROM MDP SHALL BE SIZED PER MANUFACTURER'S RECOMMENDATIONS.
5. SEE PUMP MOTOR CONTROL DIAGRAM ON DRAWING E-10.
6. PROVIDE AND INSTALL 460V, 3-POLE, NEMA 3R, HEAVY DUTY, 300HP RATED DISCONNECT.
7. SHORT CIRCUIT CURRENT AVAILABLE IN AMPS. OVER CURRENT PROTECTIVE DEVICE SHALL BE FULLY RATED TO INTERRUPT SHORT CIRCUIT CURRENT. EQUIPMENT WITHSTAND RATING TO BE EQUAL TO OR GREATER THAN SHORT CIRCUIT CURRENT.
8. PROVIDE AND INSTALL 100% RATED CIRCUIT BREAKER.
9. STUB AND CAP CONDUITS FOR FUTURE GENERATOR CONNECTION OUTSIDE OF CONCRETE ENCASEMENT 5-FEET FROM BUILDING. SEE ELECTRICAL SITE PLAN ON DRAWING E-02.
10. PROVIDE AND INSTALL VFD CABLE (BELDEN 29532C OR ENGINEER-APPROVED EQUAL). SEPARATE 1 AWG EQUIPMENT GROUND CONDUCTOR SHALL BE RAN WITH EACH CABLE IN PARALLELED CONDUITS.
11. PROVIDE AND INSTALL FEEDER PULL BOX. FOR LOCATION, SEE POWER PLAN ON DRAWING E-03. PROVIDE AND COIL 10-FEET OF EXCESS CONDUCTORS INSIDE PULL BOX. PULL BOX SHALL BE NEMA 3R, 36"H X 36"W X 12"D (HOFFMAN A36R3612 OR ENGINEER-APPROVED EQUAL).
12. PROVIDE SQUARE D P/N EXN45T3HCU OR APPROVED EQUAL.
13. PROVIDE AND INSTALL EXTERNAL SURGE PROTECTIVE DEVICE (SQUARE D P/N SSP02EMA16 OR APPROVED EQUAL) (NOT SHOWN). OCPD IN AND BRANCH CONDUCTORS FROM LP-A SHALL BE SIZED PER MANUFACTURER'S RECOMMENDATIONS.

AMERICAN WATER
Military Services
Joint Base Lewis-McChord

BOWEN COLLINS & ASSOCIATES

90% REVIEW

NOT FOR CONSTRUCTION
FOR REVIEW ONLY

NO.	DATE	REV. BY	DESCRIPTION

REVISIONS

AMERICAN WATER (P4-A60MWA2-00002)
WELL 13 REPLACEMENT
FOR AMERICAN WATER MILITARY SERVICES

VERIFY SCALE
BAR IS ONE INCH ON ORIGINAL DRAWING

REVIEW
CHECKED D. YOUNGSTROM
APPROVED D. YOUNGSTROM

DESIGN
DESIGN J. LAKE
DRAWN J. LAKE

ELECTRICAL
POWER ONE-LINE DIAGRAM

DATE: DECEMBER 2023
PROJECT NUMBER 427-22-02

DRAWING NO.
E-06

SHEET 37 OF 60

P:\AMERICAN WATER\427-22-01, 02, 03 JBLM WELLS\2.0 DESIGN PHASE\2.9 DRAWINGS\SHT\WELL 13\427220 2_E-06.dwg Plotted: 1/10/2024 10:36 AM By: Cameron Wasden

PANELBOARD NAME: MDP - WELL 13R

UPDATED:	12/27/23	NOTES:
EQUIPMENT RATING:	600 A	1. LARGEST MOTOR
LOCATION:	PUMP ROOM	2.
TOTAL DEMAND AMPS:	551. A	3.
TOTAL VOLT-AMPS:	379.18 kVA	4.
VOLTAGE L-L:	480 V	5.
VOLTAGE L-N:	277 V	6.

NOTE	TAG	DESCRIPTION	A (VA)	B (VA)	C (VA)	CONNECTED AMPS	DEMAND AMPS
	XFMR-LP-A	LIGHTING PANEL TRANSFORMER	8,161	4,256	3,446	19.0 A	23.8 A
1	VFD-1	300HP WELL PUMP VFD	100,043	100,043	100,043	361.0 A	451.3 A
	EWH-1	63KW WATER HEATER	21,062	21,062	21,062	76.0 A	76.0 A

PANEL NAME: PNL-A

PANEL RATING:	125 A	UPDATED:	1/9/24	NEMA:	1	NOTES:	1.
LOCATION:	MAIN ROOM	TOTAL AMPS:	55	PHASE:	3		2.
MOUNTING:	SURFACE	TOTAL VOLT-AMPS:	19.83 kVA	WIRE:	4		3.
MAIN TYPE:	125 A MCB	VOLTAGE L-L:	208 V				4.
GROUND BUS:	YES	VOLTAGE L-N:	120 V				5.

	A	B	C
PHASE DEMAND	10201.25	5320	4307.5
PHASE CONNECTED	8161	4256	3446

NOTE	CONDUIT	PHASE	NEUTRAL	GROUND	CIRCUIT DESCRIPTION	POLE	RATING	NUMBER	A		B		C		NUMBER	RATING	POLE	CIRCUIT DESCRIPTION	CONDUIT	PHASE	NEUTRAL	GROUND	NOTE
	3/4"	#12	#12	#12	MAIN ROOM LIGHTING	1	20	1	150	50					2	20	1	CHLORINE ROOM LIGHTING	3/4"	#12	#12	#12	
	3/4"	#12	#12	#12	FLUORIDE ROOM LIGHTING	1	20	3			50	48			4	20	1	EXTERIOR LIGHTING	3/4"	#12	#12	#12	
	3/4"	#12	#12	#12	LIGHTING CONTROL PANEL	1	20	5					60	500	6	20	1	RTU	3/4"	#12	#12	#12	
	3/4"	#12	#12	#12	PUMP ROOM RECEPTACLES	1	20	7	720	540					8	20	1	RECEPTS FOR CHEM ROOMS	3/4"	#12	#12	#12	
	3/4"	#12	#12	#12	P-2 CL METERING PUMP	1	15	9			72	252			10	15	1	P-3 CL TRANSFER PUMP	3/4"	#12	#12	#12	
	3/4"	#12	#12	#12	P-4 FL METERING PUMP	1	15	11					72	252	12	15	1	P-5 FL TRANSFER PUMP	3/4"	#12	#12	#12	
	3/4"	#12	#12	#12	FIT-1	1	15	13	17	60					14	15	1	AIT-1	3/4"	#12	#12	#12	
	3/4"	#12	#12	#12	LIT-2/3	1	15	15	.		26	26			16	15	1	LIT-4/5	3/4"	#12	#12	#12	
1	1"				GENERATOR BATTERY WARMER	1	20	17					100	900	18	20	2	GENERATOR COOLANT HEATER	1"				1
1	1"				GENERATOR BATTERY CHARGER	1	20	19	1,200	900					20	**	*	"					
	3/4"	#12	#12	#12	EWS-1 EMERGENCY SIGNALING	1	15	21			70	696			22	15	1	EF-1	3/4"	#12	#12	#12	
	3/4"	#12	#12	#12	EF-2	1	15	23					27	27	24	15	1	EF-3	3/4"	#12	#12	#12	
	3/4"	#12	-	#12	EUH-1	2	20	25	1,508	1,508					26	20	2	EUH-2	3/4"	#12	-	#12	
		#12			"	*	**	27			1,508	1,508			28	**	*	SPARE		#12			
	3/4"	#12	-	#12	EUH-3	2	20	29					1,508	0	30	20	1	SPARE					
		#12			"	*	**	31	1,508	0					32	20	1	SPARE					
					SPARE	1	20	33			0	0			34	20	1	SPARE					
					SPARE	1	20	35					0	0	36	20	1	SPARE					
					SPARE	1	20	37	0	0					38	20	1	SPARE					
					SPARE	1	20	39			0	0			40	20	1	SPARE					
					SPARE	1	20	41					0	0	42	20	1	SPARE					

GENERAL NOTES:

A. FOR EQUIPMENT LOCATIONS, SEE ELECTRICAL SITE PLAN AND POWER PLAN ON DRAWINGS E-02 AND E-03.

KEY NOTES: (#)

1. FUTURE LOAD. STUB AND CAP CONDUIT W/ PULL STRING FOR FUTURE GENERATOR CONNECTION OUTSIDE OF CONCRETE ENCASEMENT 5-FEET FROM BUILDING. SEE ELECTRICAL SITE PLAN ON E-02.

AMERICAN WATER
Military Services
Joint Base Lewis-McChord

BOWEN COLLINS & ASSOCIATES

90% REVIEW

NOT FOR CONSTRUCTION
FOR REVIEW ONLY

NO.	DATE	REV. BY	DESCRIPTION

REVISIONS

AMERICAN WATER (P4-A60MWA2-00002)
WELL 13 REPLACEMENT
FOR AMERICAN WATER MILITARY SERVICES

VERIFY SCALE
BAR IS ONE INCH ON ORIGINAL DRAWING

REVIEW
CHECKED D. YOUNGSTROM
APPROVED D. YOUNGSTROM

DESIGN
DESIGN J. LAKE
DRAWN J. LAKE

ELECTRICAL

LOAD SUMMARY AND PANEL SCHEDULE

DATE: DECEMBER 2023
PROJECT NUMBER 427-22-02

DRAWING NO.
E-07

SHEET 38 OF 60

P:\AMERICAN WATER\427-22-01, 02, 03 JBLM WELLS\2.0 DESIGN PHASE\2.9 DRAWINGS\SHT\WELL 13\4272202_E-07.dwg Plotted: 1/10/2024 10:36 AM By: Cameron Wasden

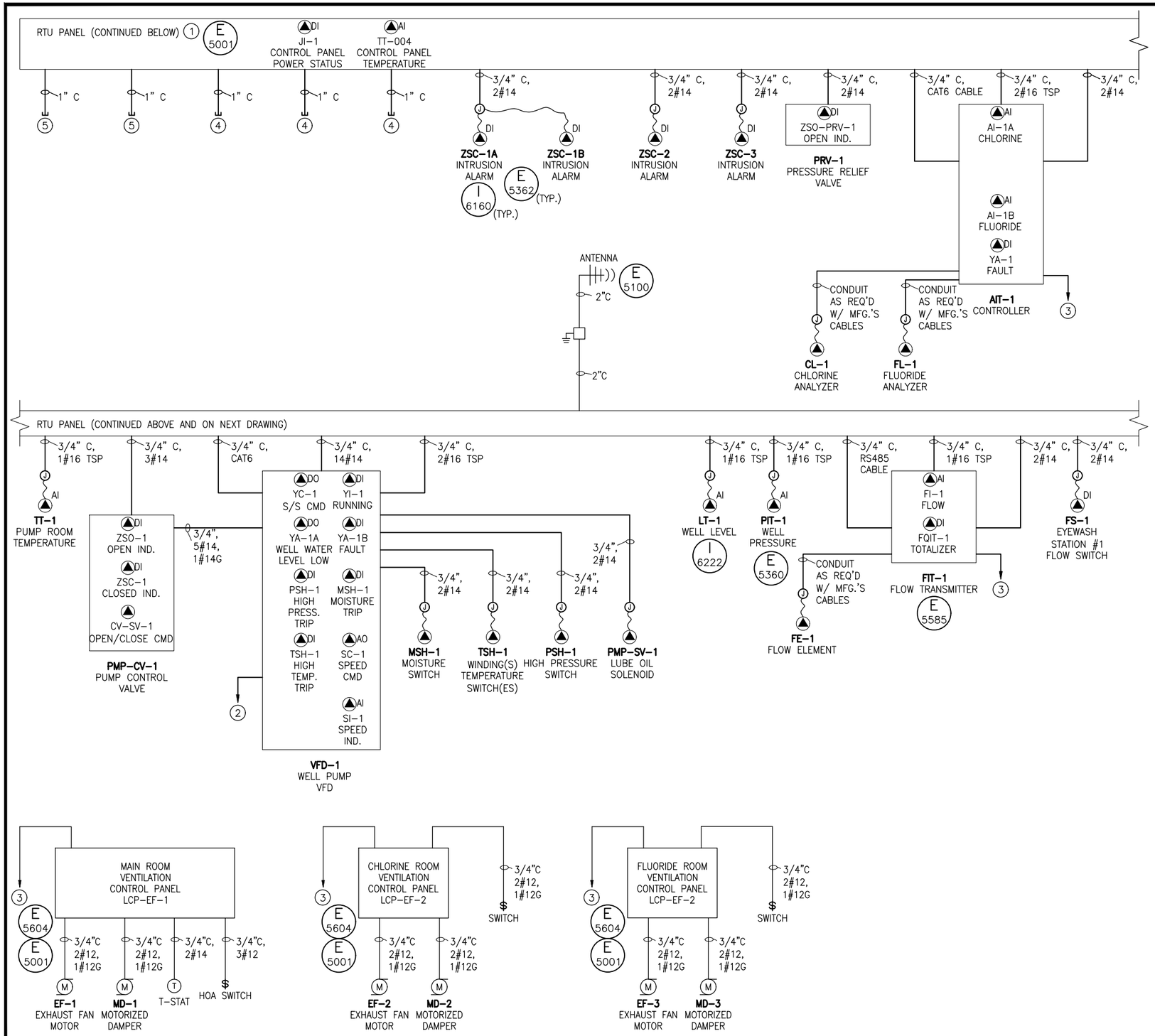

GENERAL NOTES:

A. FOR EQUIPMENT LOCATIONS, REFER TO THE ELECTRICAL SITE PLAN ON DRAWING E-02 AND THE CONTROLS PLAN ON DRAWING E-04.

KEY NOTES: (#)

1. INSTALL RTU PANEL. RTU PROVIDED BY A W SCHULTZ INC. PROVIDE AND INSTALL ALL INSTRUMENTATION, CONDUIT, CABLES, AND CONDUCTORS. LABEL ALL CABLES AND CONDUCTORS AT BOTH ENDS. TERMINATE CABLES AND CONDUCTORS ON NON-RTU END. PROVIDE SUFFICIENT LENGTH OF COILED CONDUCTORS AND CABLING IN ORDER FOR A W SCHULTZ INC. TO MAKE TERMINATIONS ON RTU-END. PROVIDE ASSISTANCE TO A W SCHULTZ INC. TO PERFORM POINT-TO-POINT CHECKOUT OF THE SYSTEM.
2. SEE POWER ONE-LINE DIAGRAM ON DRAWING E-06 FOR CONDUIT AND CONDUCTOR INFORMATION.
3. SEE PANEL SCHEDULE ON DRAWING E-07 FOR CIRCUIT NUMBER AND CONDUIT AND CONDUCTOR INFORMATION.
4. STUB AND CAP CONDUIT W/ PULL STRING FOR FUTURE GENERATOR CONNECTION OUTSIDE OF CONCRETE ENCASEMENT 5-FEET FROM BUILDING. SEE ELECTRICAL SITE PLAN ON E-02.
5. STUB AND CAP CONDUIT W/ PULL STRING FOR FUTURE TRANSFER SWITCH CONNECTION. TRANSFER SWITCH WILL BE LOCATED WHERE THE FEEDER PULL BOX IS NOW SHOWN ON THE POWER PLAN ON DRAWING E-03.

CONTROL ONE-LINE DIAGRAM

AMERICAN WATER Military Services
Joint Base Lewis-McChord

BOWEN COLLINS & ASSOCIATES

90% REVIEW

NOT FOR CONSTRUCTION FOR REVIEW ONLY

NO.	DATE	REV. BY	DESCRIPTION

REVISIONS

VERIFY SCALE
BAR IS ONE INCH ON ORIGINAL DRAWING

AMERICAN WATER (P4-A60/MWA2-00002)
WELL 13 REPLACEMENT
FOR AMERICAN WATER MILITARY SERVICES

REVIEW
CHECKED D. YOUNGSTROM
APPROVED D. YOUNGSTROM

DESIGN
DESIGN J. LAKE
DRAWN J. LAKE

ELECTRICAL
CONTROL ONE-LINE DIAGRAM - 1

DATE: DECEMBER 2023
PROJECT NUMBER 427-22-02

DRAWING NO.
E-08

SHEET 39 OF 60

P:\AMERICAN WATER\427-22-01, 02, 03 JBLM WELLS\2.0 DESIGN PHASE\2.9 DRAWINGS\SHT\WELL 13\4272202_E-08.dwg Plotted: 1/10/2024 10:36 AM By: Cameron Wasden

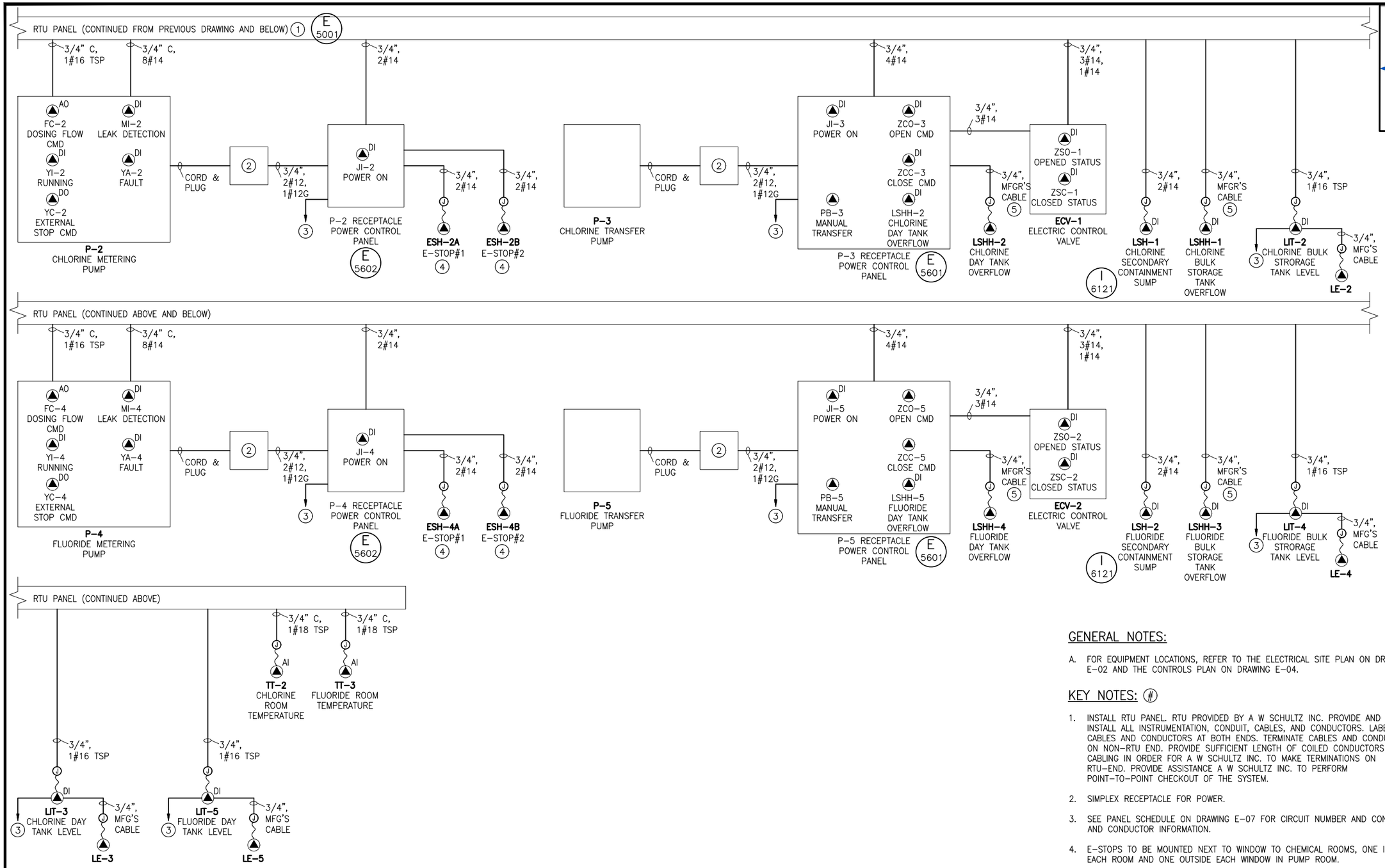

GENERAL NOTES:

A. FOR EQUIPMENT LOCATIONS, REFER TO THE ELECTRICAL SITE PLAN ON DRAWING E-02 AND THE CONTROLS PLAN ON DRAWING E-04.

KEY NOTES: (#)

1. INSTALL RTU PANEL. RTU PROVIDED BY A W SCHULTZ INC. PROVIDE AND INSTALL ALL INSTRUMENTATION, CONDUIT, CABLES, AND CONDUCTORS. LABEL ALL CABLES AND CONDUCTORS AT BOTH ENDS. TERMINATE CABLES AND CONDUCTORS ON NON-RTU END. PROVIDE SUFFICIENT LENGTH OF COILED CONDUCTORS AND CABLING IN ORDER FOR A W SCHULTZ INC. TO MAKE TERMINATIONS ON RTU-END. PROVIDE ASSISTANCE A W SCHULTZ INC. TO PERFORM POINT-TO-POINT CHECKOUT OF THE SYSTEM.
2. SIMPLEX RECEPTACLE FOR POWER.
3. SEE PANEL SCHEDULE ON DRAWING E-07 FOR CIRCUIT NUMBER AND CONDUIT AND CONDUCTOR INFORMATION.
4. E-STOPS TO BE MOUNTED NEXT TO WINDOW TO CHEMICAL ROOMS, ONE INSIDE EACH ROOM AND ONE OUTSIDE EACH WINDOW IN PUMP ROOM.
5. PROVIDE AND INSTALL SUFFICIENT LENGTH OF MANUFACTURER'S CABLING TO MAKE TERMINATION WITHOUT SPLICING.

CONTROL ONE-LINE DIAGRAM CONT.

AMERICAN WATER
Military Services
Joint Base Lewis-McChord

BOWEN COLLINS & ASSOCIATES

90% REVIEW

NOT FOR CONSTRUCTION
FOR REVIEW ONLY

NO.	DATE	REV. BY	DESCRIPTION

REVISIONS

AMERICAN WATER (P4-A60/MVA2-00002)
WELL 13 REPLACEMENT
FOR AMERICAN WATER MILITARY SERVICES

VERIFY SCALE
BAR IS ONE INCH ON ORIGINAL DRAWING

REVIEW
CHECKED D. YOUNGSTROM
APPROVED D. YOUNGSTROM

DESIGN
DESIGN J. LAKE
DRAWN J. LAKE

ELECTRICAL

CONTROL ONE-LINE DIAGRAM - 2

DATE: DECEMBER 2023
PROJECT NUMBER 427-22-02

DRAWING NO.
E-09

SHEET 40 OF 60

P:\AMERICAN WATER\427-22-01, 02, 03 JBLM WELLS\2.0 DESIGN PHASE\2.9 DRAWINGS\SHT\WELL 13\4272202_E-09.dwg Plotted: 1/10/2024 10:36 AM By: Cameron Wasden

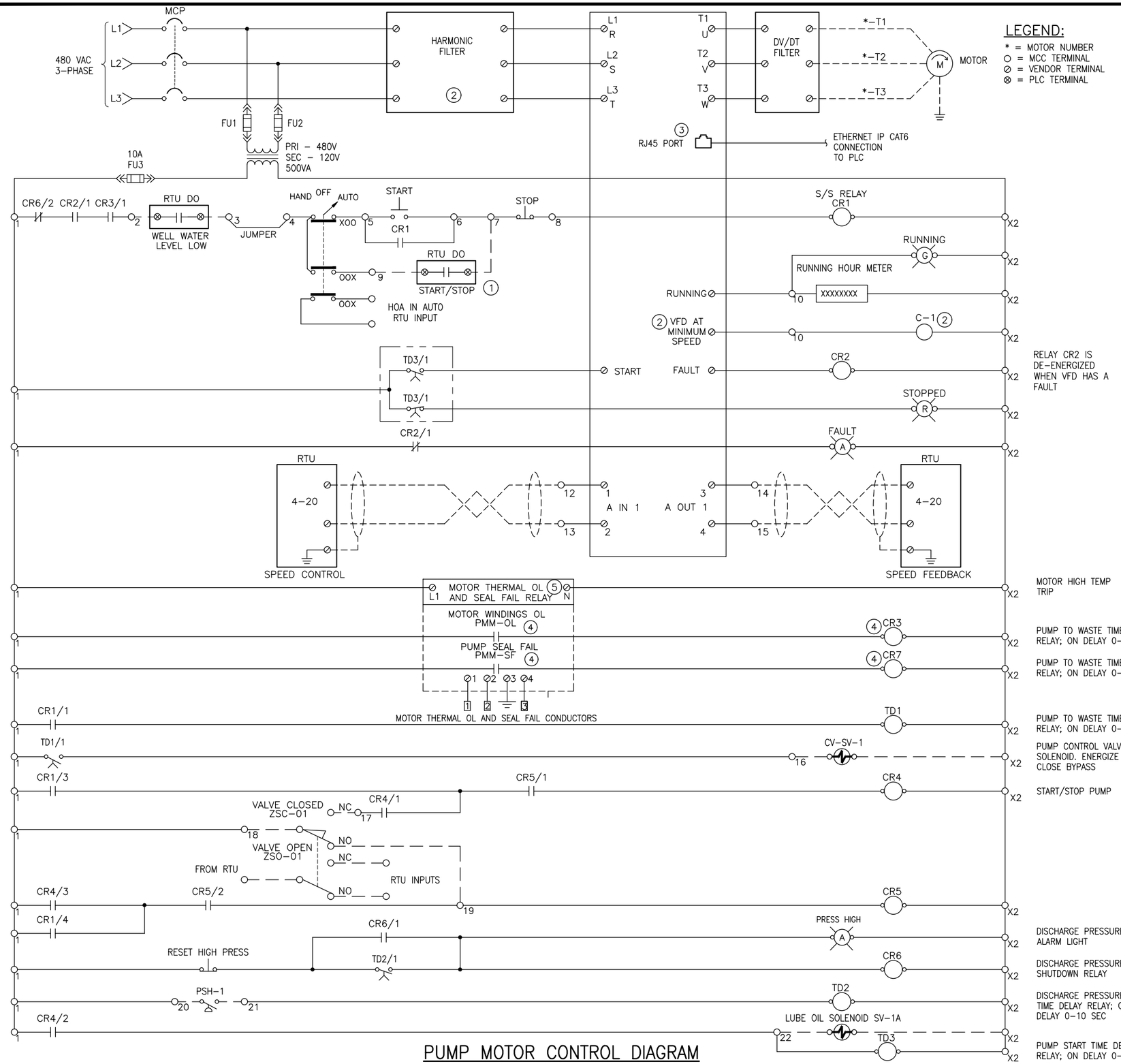

LEGEND:

- * = MOTOR NUMBER
- ○ = MCC TERMINAL
- ⊘ = VENDOR TERMINAL
- ⊗ = PLC TERMINAL

GENERAL NOTES:

1. THIS IS A GENERIC WIRING DIAGRAM OF A VARIABLE FREQUENCY DRIVE. DEPENDING ON THE MANUFACTURER, THE ACTUAL WIRING DIAGRAM MAY DIFFER SLIGHTLY. PLEASE NOTE THAT THE DIAGRAM IS SHOWN IN THE STATE AS IF THE CONTROL RUNGS WERE DEENERGIZED.
2. INSTALL COOLING FANS TO PREVENT VFD FROM OVERHEATING.
3. VFD KEYPAD SHALL BE ACCESIBLE ON FRONT DOOR OF MCC.
4. CONTROL START SEQUENCE:
   a. CONTROL VALVE IS OPEN AND PUMP IS NOT RUNNING.
   b. START COMMAND ENERGIZES CR1, PUMP CONTROL VALVE TIME DELAY RELAY (TD1), CR4, WATER SOLENOID, AND PUMP START TIME DELAY RELAY (TD3).
   c. TD3 STARTS THE VFD AND THE WELL PUMPS TO BYPASS.
   d. TD1 ENERGIZES PUMP CONTROL VALVE SOLENOID TO CLOSE VALVE AND STOP PUMPING TO BYPASS.
   e. BYPASS CLOSES AND PUMPS WATER TO SYSTEM.
5. CONTROL STOP SEQUENCE:
   a. PUMP IS RUNNING AND WATER IS PUMPING TO SYSTEM.
   b. STOP COMMAND DE-ENERGIZES CR1, TD1, AND PUMP CONTROL VALVE SOLENOID TO OPEN VALVE AND PUMP TO BYPASS.
   c. WHEN PUMP CONTROL VALVE IS OPEN; CR4 AND TD3 DE-ENERGIZE AND THE VFD STOPS.

KEY NOTES:

1. RTU OUTPUT TO START AND STOP PUMP.
2. THE "VFD AT MINIMUM SPEED" OUTPUT WILL ENERGIZE THE CONTACTOR WHEN THE VFD REACHES 40 HZ AND IT WILL DE-ENERGIZE THE CONTACTOR WHEN THE SPEED OF THE VFD IS DOWN TO 35 HZ. THE CONTACTOR WILL TURN ON THE CAPACITORS IN THE HARMONIC FILTER WHEN IT IS ENERGIZED AND WILL TURN OFF THE CAPACITORS IN THE HARMONIC FILTER WHEN IT IS DE-ENERGIZED. REFER TO THE SPECIFICATION FOR MORE INFORMATION.
3. ETHERNET IP COMMUNICATION TO COMMUNICATE TO PLC. THIS SHALL BE CONNECTED WITH A CAT6 CABLE AND RJ45 CONNECTORS. SEE VFD SPECIFICATION FOR PARAMETERS TO BE AVAILABLE OVER THIS COMMUNICATION LINK.
4. RELAY CONTACTS OPEN WHEN THERE IS A THERMAL OVERLOAD OR A SEAL FAIL AND CONTROL RELAYS CR3 AND CR7 DE-ENERGIZE.
5. COORDINATE SUPPLY AND INSTALLATION OF RELAY WITH PUMP SUPPLIER.

PUMP MOTOR CONTROL DIAGRAM

AMERICAN WATER
Military Services
Joint Base Lewis-McChord

BOWEN COLLINS & ASSOCIATES

90% REVIEW

NOT FOR CONSTRUCTION
FOR REVIEW ONLY

NO.	DATE	REV. BY	DESCRIPTION

REVISIONS

AMERICAN WATER (P4-A60/MWA2-00002)
WELL 13 REPLACEMENT
FOR AMERICAN WATER MILITARY SERVICES

VERIFY SCALE
BAR IS ONE INCH ON ORIGINAL DRAWING

REVIEW
CHECKED D. YOUNGSTROM
APPROVED D. YOUNGSTROM

DESIGN
DESIGN J. LAKE
DRAWN J. LAKE

ELECTRICAL
PUMP MOTOR CONTROL DIAGRAM

DATE: DECEMBER 2023
PROJECT NUMBER 427-22-02

DRAWING NO.
E-10

SHEET 41 OF 60

P:\AMERICAN WATER\427-22-01, 02, 03 JBLM WELLS\2.0 DESIGN PHASE\2.9 DRAWINGS\SHT\WELL 13\4272202_E-10.dwg Plotted: 1/10/2024 10:36 AM By: Cameron Wasden

PLUMBING LEGEND

SYMBOL	DESCRIPTION
PW	POTABLE COLD WATER
TW	POTABLE TEPID WATER
HWC	DOMESTIC HOT WATER RECIRC.
UW	UTILITY WATER
SPW	SOFT COLD WATER
SD	UNDERSLAB SANITARY DRAIN
SV	SANITARY VENT
FCO	FLOOR CLEAN OUT
GCO	GRADE CLEAN OUT
WCO	WALL CLEAN OUT
CD	CONDENSATE DRAIN
D	DRAIN
SS	UNDERSLAB SANITARY SEWER
F	FIRE SERVICE
CA	COMPRESSED AIR
CWV	UNDERGROUND COMBINATION WASTE VENT
PCR	PUMPED CONDENSATE RETURN
CR	CONDENSATE RETURN
S=.XXX	SLOPE DOWN IN DIRECTION OF FLOW
NG	NATURAL GAS
	SHUTOFF VALVE
	GATE VALVE
	BALL VALVE
	BUTTERFLY VALVE
G	GLOBE VALVE
(US)	UNDERSLAB
RWL	ROOF DRAIN
OFL	OVERFLOW ROOF DRAIN

SYMBOL	DESCRIPTION
	GAS SHUT-OFF COCK
	SWING CHECK VALVE
	SPRING CHECK VALVE
	STRAINER
	WATER OUTLET (TYPE INDICATED)
	BACKFLOW PREVENTER (TYPE INDICATED)
	SLEEVE (PIPE) THRU WALL OR FLOOR
	FLEX CONNECTOR (TYPE INDICATED)
	HOSE END DRAIN VALVE
	PRESSURE REDUCING VA.
	TEMP. & PRESSURE RELIEF VALVE
	AUTOMATIC AIR VENT
DE	DIELECTRIC UNION
	UNION
M	MANUAL FLOW BALANCING VALVE
A	AUTOMATIC FLOW BALANCING VALVE
T	DIAL THERMOMETER
P	PRESSURE GAUGE – PROVIDE WITH PIGTAIL FOR STEAM
X	PIPE ANCHOR
S	SOLENOID VALVE
	L.P. VALVE
	ECCENTRIC PLUG BALANCING VALVE
	VALVE IN RISER
	TEE UP
	TEE DOWN
	ELBOW UP
	ELBOW DOWN
	PIPE CAP
	PIPE DRAIN & CAP
	CONNECT TO EXISTING

PLUMBING ABBREVIATIONS

AB.C.	ABOVE CEILING	MAX	MAXIMUM
AFF	ABOVE FINISHED FLOOR	MIN	MINIMUM
AV	ACID VENT	NG	NATURAL GAS
AW	ACID WASTE	(N)	NEW
BFF	BELOW FINISHED FLOOR	NO	NORMALLY OPEN (VALVE)
BG	BELOW GRADE	NC	NORMALLY CLOSED (VALVE)
CA	COMPRESSED AIR	OH	OVER HEAD
CD	CONDENSATE DRAIN	OFL	OVERFLOW RAIN WATER LEADER
C.I.N.H.	CAST IRON NO HUB	PW	POTABLE WATER
CO	CLEANOUT	(R)	PIPE RISE
CKV	CHECK VALVE	RD	ROOF DRAIN
CW	COLD WATER	RIO	ROUGH-IN ONLY
CX	CONNECT TO EXISTING	RWL	RAIN WATER LEADER
(A)	PIPE DROP	SHT	SHEET
D	DRAIN	SCW	SOFT COLD WATER
DN	PIPE DROP TO NEXT LEVEL	SOV	SHUT OFF VALVE
DTL	DETAIL	TPL	TRAP PRIMER LINE
(E)	EXISTING	UG	UNDERGROUND
F	FIRE SERVICE	UP	PIPE RISE TO NEXT LEVEL
FCO	FLOOR CLEANOUT	US	UNDER SLAB
FND	FOUNDATION DRAIN	UTR	UP THRU ROOF
GCO	GRADE CLEANOUT	V	VENT
HW	HOT WATER	VA	VALVE
HWC	HOT WATER CIRCULATION	VTR	VENT THRU ROOF
IDW	INDIRECT WASTE	W	WASTE
I.E.	INVERT ELEVATION	WCO	WALL CLEANOUT
IRR	IRRIGATION		
LPG	LIQUEFIED PETROLEUM GAS		
LWCO	LOW WATER CUTOFF		

PLUMBING GENERAL NOTES:

1. COORDINATE PLUMBING FIXTURES AND RELATED PIPING WITH ALL OTHER TRADES AS REQUIRED.
2. REFER TO ARCHITECTURAL FLOOR PLANS AND INTERIOR ELEVATIONS FOR EXACT FIXTURE LOCATIONS AND MOUNTING HEIGHTS.
3. LOCATE WATER PIPING IN HEATED AREAS ONLY. DO NOT LOCATE PIPING IN NON-INSULATED ATTIC, CEILING OR WALL SPACES. DO NOT LOCATE WATER PIPING IN ANY EXTERIOR WALL.
4. ACCESS PANEL LOCATIONS MUST BE COORDINATED WITH EITHER ARCHITECT OR GENERAL CONTRACTOR.
5. WALLS ARE SHOWN DASHED ON FOUNDATION PLAN FOR REFERENCE AND CLARITY ONLY. WASTE PIPING IS ROUTED UNDER FLOOR SLAB.
6. SANITARY DRAIN AND WASTE PIPING SMALLER THAN 4" IS TO BE SLOPED AT 1/4" PER FOOT. ALL SANITARY DRAIN AND WASTE PIPING 4" AND LARGER IS TO BE INSTALLED AT 1/8" SLOPE PER FOOT, UNLESS GREATER SLOPE IS REQUIRED BY THE LOCAL AUTHORITY HAVING JURISDICTION.

AMERICAN WATER
Military Services
Joint Base Lewis-McChord

Cushing Terrell
cushingterrell.com
800.757.9522

BOWEN COLLINS & ASSOCIATES

90% REVIEW

NOT FOR CONSTRUCTION
FOR REVIEW ONLY

REVISIONS

NO.	DATE	REV. BY	DESCRIPTION

AMERICAN WATER
WELL 13 REPLACEMENT
JBLM WASHINGTON

VERIFY SCALE
BAR IS ONE INCH ON ORIGINAL DRAWING

REVIEW
CHECKED L RANKIN
APPROVED L RANKIN

DESIGN
DESIGN L RANKIN
DRAWN J WILSON

PLUMBING

PLUMBING ABBREVIATIONS, LEGEND, AND NOTES

PROJECT NUMBER 427-22-03

DATE: DECEMBER 2023

DRAWING NO.
P-01

SHEET 42 OF 60

L:\BCA_JBLM\SDC\BIM\CAD\Plumb\427202_Well_13_P_01.dwg Plotted 12/21/2023 3:47 PM By Jeremy Wilson

WATER HEATER SCHEDULE

PLAN CODE	BASIS OF DESIGN	MODEL	PERFORMANCE DATA				NOTES
			TYPE	INPUT (KW)	TEMP RISE	ELECTRIC SERVICE	
EWH–1	KELTECH	SNA	ELECTRIC TANKLESS	63.0	20 DEG AT 20 GPM	480V–3PH–60HZ	1, 2, 3, 4, 5, 6, 7

SCHEDULE NOTES:

1. PROVIDE COMMERCIAL TANKLESS ELECTRIC SAFETY SHOWER HEATER INTENDED FOR SUPPLY TO SAFETY FIXTURES.
2. NEMA 4 FLOOR MOUNTED CABINET ENCLOSURE – 60 IN. TALL x 30 IN. WIDTH x 12 IN. DEPTH. WITH 12 IN HIGH LEGS.
3. PROVIDE ANTI SCALD FEATURE TO PREVENT OVERSHOOT AND EXCESS TEMPERATURE RISE.
4. DUAL FLOW ACTIVATION – LOW AND HIGH SAFETY FIXTURE FLOW RATES.
5. ASME CERTIFICATION, CERTIFIED LEAD FREE AND MEETS ANSI Z358.1 STANDARDS.
6. ELECTRICAL – FUSED DISCONNECT INTERLOCK WITH ENCLOSURE DOOR, GROUND FAULT, SINGLE ELECTRICAL SERVICE AND EACH HEATING ELEMENT IS PROTECTED BY FUSING.
7. PROVIDE UNIT WITH HEATING ELEMENT, WATER TEMPERATURE CONTROLLER AND SOLID STATE RELAYS.

PLUMBING FIXTURE AND CONNECTION SCHEDULE

PLAN CODE	FIXTURE						CONNECTIONS			REMARKS
	ITEM	BASIS OF DESIGN	MODEL	TYPE	MATERIAL	COLOR/FINISH	TEMPERED	WASTE	VENT	
EWS–1	EMERGENCY DRENCH SHOWER AND EYEWASH UNIT	BRADLEY	S19–310TW	FROST PROOF EMERGENCY DRENCH SHOWER AND EYEWASH COMBINATION WITH WEEP VALVE ASSEMBLY TO DRAIN WATER FROM OUTSIDE. INTEGRAL 22 GPM FLOW CONTROL SHOWERHEAD ASSEMBLY, WITH SOFT FLOW EYEWASH ANTI SURGE HEADS WITH INTEGRAL FLOW CONTROLS AND PROECTIVE COVERS. CONSTRUCTION OF CORROSION RESISTANCE GALVANIZED STEEL PIPE TO BE INSTALLED IN INTERIOR SPACE. SHOWER AND EYWASH VALVES OPERATE FROM HIGHLY VISIBLE PUSH HANDLES.	GALVANIZED STEEL	POWDER COATED SAFETY YELLOW	1 1/4"			1
	EMERGENCY SIGNALING SYSTEM	BRADLEY	S19–323	EMERGENCY ALARM AND LIGHT SYSTEM OPERATED BY A DOUBLE POLE, DOUBLE THROW FLOW SWITCH, AND ACTIVATES AN AMBER FLASHING LIGHT AND HORN AT 90 DB. SWITCH WILL ACTIVATE AT 2.4 GPM. SYSTEM CAN BE MOUNTED TO A PIPE OR WALL. VOLTAGE 120V–1PH–60HZ, NEMA 3R ENCLOSURE. 1 1/4" INLET PIPE SIZE FOR DRENCH SHOWER.			1 1/4"			

SCHEDULE NOTES:

1. PROVIDE AND HANG EMERGENCY EYEWASH/SHOWER SIGN IN VISIBLE LOCATION. SET TEMPERED WATER TEMPERATURE AT 80–85 DEG F.

AMERICAN WATER Military Services
Joint Base Lewis-McChord

BOWEN COLLINS & ASSOCIATES

Cushing Terrell
cushingterrell.com
800.757.9522

90% REVIEW

NOT FOR CONSTRUCTION
FOR REVIEW ONLY

REVISIONS

NO.	DATE	REV. BY	DESCRIPTION

VERIFY SCALE
BAR IS ONE INCH ON ORIGINAL DRAWING

AMERICAN WATER
WELL 13 REPLACEMENT
JBLM WASHINGTON

REVIEW
CHECKED L RANKIN
APPROVED L RANKIN

DESIGN
DESIGN L RANKIN
DRAWN J WILSON

PLUMBING

PLUMBING SCHEDULES

PROJECT NUMBER 427-22-03

DATE: DECEMBER 2023

DRAWING NO.
P-02

SHEET 43 OF 60

L:\BCA_JBLM\SDC\BIM\CAD\Plumb\427\2202_Well_13_P_02.dwg Plotted: 12/21/2023 3:47 PM By: Jeremy Wilson

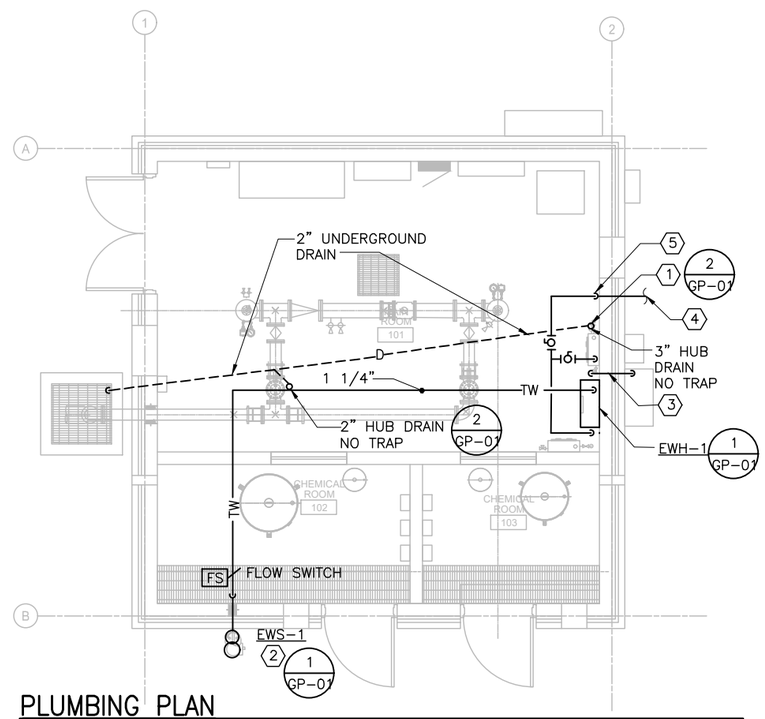

PLUMBING PLAN

SCALE: 1/4" = 1'-0"

SHEET NOTES: #

1. HUB DRAIN FOR ANALYZERS, SEE DETAIL 2/GP-01
2. EMERGENCY FIXTURE, SEE DETAIL 1/GP-01 AND INSTALL MANUFACTURER INSTALLATION INSTRUCTIONS.
3. DISCHARGE WATER HEATER HEAT DUMP AND RELIEF VALVE TO EXTERIOR. NO THREADED CONNECTION ON DISCHARGE.
4. CONNECT 2" TO WATER MAIN, SEE CIVIL DRAWING C-03.
5. INSTALL 2" SHUT OFF VALVE AND REDUCE TO 1-1/4".

AMERICAN WATER Military Services
Joint Base Lewis-McChord

BOWEN COLLINS & ASSOCIATES

Cushing Terrell
cushingterrell.com
1800.757.9522

90% REVIEW

NOT FOR CONSTRUCTION FOR REVIEW ONLY

NO.	DATE	REV. BY	DESCRIPTION

REVISIONS

AMERICAN WATER
WELL 13 REPLACEMENT
JBLM WASHINGTON

VERIFY SCALE
BAR IS ONE INCH ON ORIGINAL DRAWING

REVIEW
CHECKED L RANKIN
APPROVED L RANKIN

DESIGN
DESIGN L RANKIN
DRAWN J WILSON

PLUMBING

PLUMBING PLAN

PROJECT NUMBER 427-22-03

DATE: DECEMBER 2023

DRAWING NO.
P-03

SHEET 44 OF 60

L:\BCA_;JBLM\SDC\BIMCAD\Plumb\4272202_Well_13_P_03.dwg Plotted: 12/21/2023 5:05 PM By: Laura Rankin

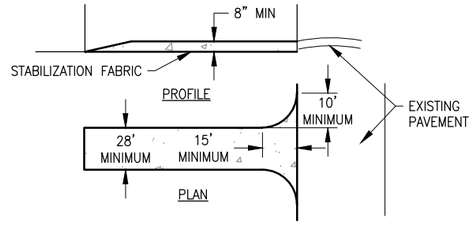

NOTES:

1. STONE SIZE – USE 2'-4" STONE, OR RECLAIMED CONCRETE EQUIVALENT.
2. LENGTH – AS REQUIRED, BUT NOT LESS THAN 50 FEET
3. THICKNESS – NOT LESS THAN EIGHT (8) INCHES.
4. WIDTH – 28 FOOT MINIMUM, BUT NOT LESS THAN THE FULL WIDTH AT POINTS WHERE INGRESS OR EGRESS OCCURS.
5. STABILIZATION FABRIC – WILL BE PLACED OVER THE ENTIRE AREA PRIOR TO PLACING STONE.
6. SURFACE WATER – ALL SURFACE WATER FLOWING OR DIVERTED TOWARD CONSTRUCTION ENTRANCES SHALL BE PIPED ACROSS THE ENTRANCE. IF PIPING IS IMPRACTICAL, A MOUNTABLE BERM WITH 5:1 SIDE SLOPES WILL BE PERMITTED.
7. MAINTENANCE – THE ENTRANCE SHALL BE MAINTAINED IN A CONDITION WHICH WILL PREVENT TRACKING OR FLOWING OF SEDIMENT ONTO PUBLIC RIGHTS-OF-WAY. THIS MAY REQUIRE PERIODIC TOP DRESSING WITH ADDITIONAL STONE AS CONDITIONS DEMAND AND REPAIR AND/OR CLEANOUT OF ANY MEASURES USED TO TRAP SEDIMENT. ALL SEDIMENT SPILLED DROPPED, WASHED OR TRACKED ONTO PUBLIC RIGHTS-OF-WAY MUST BE REMOVED IMMEDIATELY.
8. WASHING – WHEELS SHALL BE CLEANED TO REMOVE SEDIMENT PRIOR TO ENTRANCE ONTO PUBLIC RIGHTS-OF-WAY. WHEN WASHING IS REQUIRED, IT SHALL BE DONE ON AN AREA STABILIZED WITH STONE AND WHICH DRAINS TO AN APPROVED SEDIMENT TRAPPING DEVICE.
9. PERIODIC INSPECTION AND NEEDED MAINTENANCE SHALL BE PROVIDED AFTER EACH RAIN.

STABILIZED CONSTRUCTION ENTRANCE

SCALE: NTS

C 2105

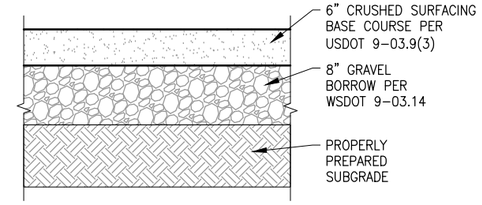

NOTES:

1. COMPACT BASE AND BORROW MATERIAL TO AT LEAST 95% MAXIMUM DRY DENSITY PER ASTM D1557.
2. SCARIFY AND RECOMPACT SUBGRADE TO 95% MAXIMUM DRY DENSITY.

GRAVEL PARKING

SCALE:NTS

C 2111

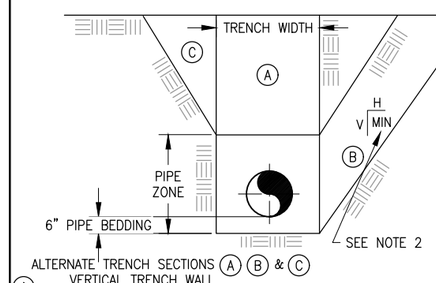

A VERTICAL TRENCH WALL
1. MAX UNSUPPORTED HEIGHT = 3.5 FT.
2. FOR DEPTH OVER 3.5 FT SHORING OR SHEATHING REQUIRED.

B SLOPING TRENCH WALL
1. NOT TO BE USED WITHOUT APPROVAL OF ENGINEER.
2. REQUIRES IMPROVED PIPE ZONE BACKFILL OR INCREASE IN PIPE CLASS

C COMBINATION VERTICAL/SLOPING TRENCH
1. TRENCH IN PIPE ZONE SHALL HAVE VERTICAL WALLS WHERE STABLE SOIL EXISTS

NOTES:

1. TRENCH EXCAVATIONS TO BE IN ACCORDANCE WITH OSHA SAFETY AND HEALTH STANDARDS FOR CONSTRUCTION. (29 CFR 1926).
2. CONTRACTOR TO PROVIDE SHORING OR TRENCH BOX IN ROADWAY AREAS TO MINIMIZE TRENCH WIDTH.
3. CONTRACTOR TO PROVIDE ALL DEWATERING MEASURES AS REQUIRED. GROUNDWATER ELEVATION SHALL BE MAINTAINED AT LEAST 2' BELOW BOTTOM OF TRENCH UNTIL BACKFILL IS COMPLETE.
4. SLIDE SLOPES SHALL MEET MINIMUM REQUIREMENTS OF THE GEOTECHNICAL INVESTIGATION.

TYPICAL TRENCH EXCAVATION SECTION

NTS

C 2122

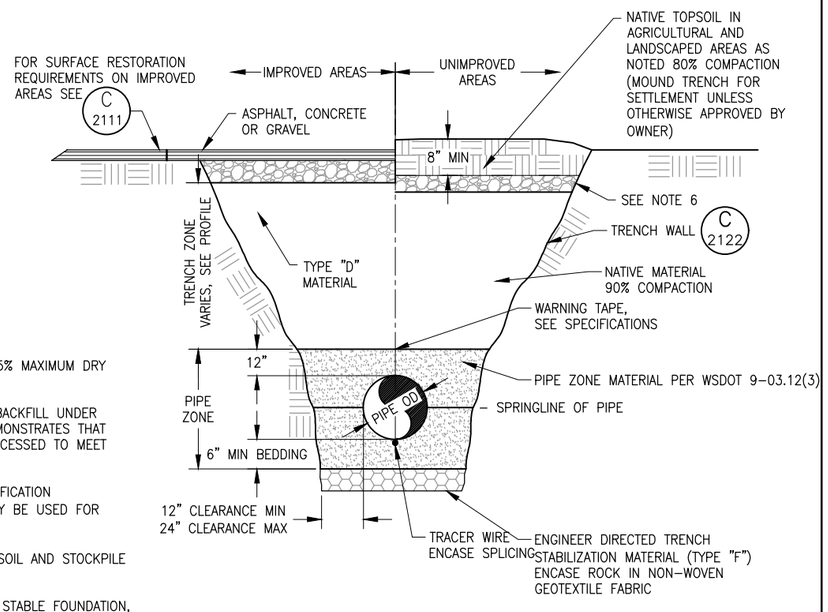

NOTES:

1. ALL MATERIAL SHALL BE COMPACTED TO 95% MAXIMUM DRY DENSITY UNLESS NOTED OTHERWISE.
2. IMPORT BACKFILL REQUIRED FOR TRENCH BACKFILL UNDER ROADWAY AREAS, UNLESS CONTRACTOR DEMONSTRATES THAT SUITABLE ON-SITE MATERIAL CAN BE PROCESSED TO MEET SPECIFIED BACKFILL REQUIREMENTS.
3. SCREENED NATIVE MATERIAL MEETING SPECIFICATION REQUIREMENT FOR 'SUITABLE MATERIAL' MAY BE USED FOR TRENCH ZONE BACKFILL.
4. IN UNIMPROVED AREAS, STRIP TOP 8" OF SOIL AND STOCKPILE PRIOR TO TRENCH EXCAVATION.
5. IF NATIVE SOILS DO NOT PROVIDE A FIRM, STABLE FOUNDATION, AS DETERMINED BY ENGINEER, OVER EXCAVATE BELOW BOTTOM OF TRENCH AND BACKFILL WITH TRENCH STABILIZATION MATERIAL AS SHOWN.
6. TOP 6" OF TRENCH BACKFILL BENEATH THE TOPSOIL LAYER SHOULD BE INSTALLED, SMOOTHED, BUT LEFT UN-COMPACTED.

TYPICAL TRENCH BACKFILL SECTION

NTS

C 2124

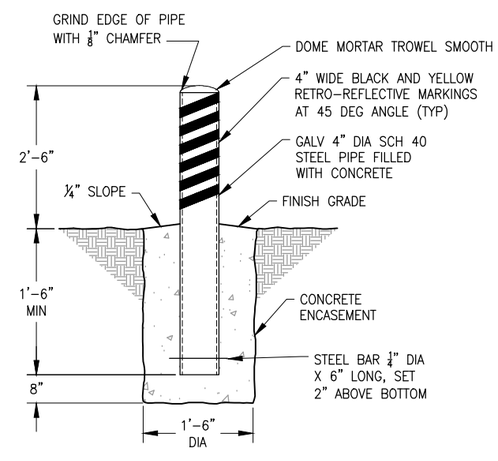

BOLLARD

SCALE:NTS

C 2205

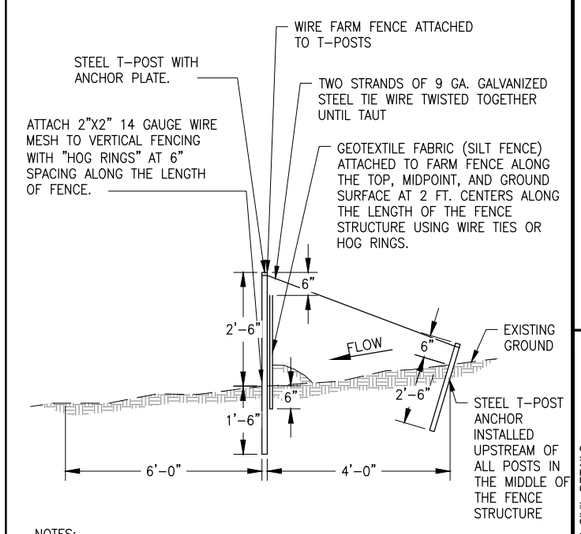

NOTES:

1. POSTS SPACED 6' O.C. MAX.
2. FILTER CLOTH TO BE TIED TO MESH EVERY 24" AT TOP AND MIDDLE WITH 6" FOLDED OVERLAP AT VERTICAL SEAMS,
3. FENCE SHALL BE MAINTAINED AND ACCUMULATED MATERIAL REMOVED.
4. CONTRACTOR MAY SECURE SILT FENCE FILTER CLOTHE TO CHAIN LINK CONSTRUCTION FENCE WHERE APPLICABLE, IN INSTANCES WHERE FILTER CLOTH IS SECURED TO CHAIN LINK FENCE, WIRE MESH IS NOT REQUIRED. IF FILTER CLOTH IS NOT SECURED TO CHAIN LINK FENCE, IT MUST BE ATTACHED TO WIRE MESH PER THE DETAIL.

SILT FENCE DETAIL

SCALE:NTS

C 2280

AMERICAN WATER
Military Services
Joint Base Lewis-McChord

BOWEN COLLINS & ASSOCIATES

90% REVIEW

NOT FOR CONSTRUCTION FOR REVIEW ONLY

NO.	DATE	REV. BY	DESCRIPTION

REVISIONS

VERIFY SCALE
BAR IS ONE INCH ON ORIGINAL DRAWING

AMERICAN WATER (P4-A60MWA2-00002)
WELL 13 REPLACEMENT
FOR AMERICAN WATER MILITARY SERVICES

REVIEW
CHECKED R. ROCHA
APPROVED J. OLDHAM

DESIGN
DESIGN R. GARCIA
DRAWN R. GARCIA

GENERAL CIVIL DETAILS
GENERAL CIVIL DETAILS - 1

PROJECT NUMBER 427-22-02
DATE: DECEMBER 2023

DRAWING NO.
GC-01

SHEET 45 OF 60

P:\American Water\427-22-01, 02, 03 JBLM Wells\2.0 Design Phase\2.9 Drawings\shit\Well 13\427202_GC-01.dwg Plotted: 12/28/2023 8:44 AM By: Jon Oldham

GENERAL STRUCTURAL NOTES

GENERAL

1. THE SPECIFICATIONS AND REQUIREMENTS INDICATED ON THIS SHEET ARE INTENDED AS A BASIC SUMMARY OF THE MATERIAL CONSTRUCTION AND INSPECTION REQUIREMENTS FOR THIS PROJECT. ADDITIONAL REQUIREMENTS ARE GIVEN IN THE PROJECT SPECIFICATIONS. IN THE EVENT OF A CONFLICT BETWEEN THESE GENERAL NOTES AND THE REQUIREMENTS GIVEN IN THE PROJECT SPECIFICATIONS, THE MORE RESTRICTIVE PROVISION SHALL GOVERN UNLESS OTHERWISE DIRECTED BY THE ENGINEER.
2. FOR LOCATION AND DIMENSIONS OF SLEEVES, CURBS, OPENINGS, AND DEPRESSIONS NOT SHOWN ON THE STRUCTURAL DRAWINGS, SEE ARCHITECTURAL, CIVIL, MECHANICAL, AND ELECTRICAL DRAWINGS. THE CONTRACTOR SHALL VERIFY AND COORDINATE PENETRATIONS SHOWN ON THE OTHER PROJECT DRAWINGS, WHETHER THEY ARE SHOWN ON THE STRUCTURAL DRAWINGS OR NOT.
3. EMBEDDED ITEMS, SUCH AS PIPE SLEEVES, CONDUITS, AND INSERTS SHALL ALL BE RIGIDLY INSTALLED IN PLACE BEFORE CONCRETE IS POURED. SEE ARCHITECTURAL, CIVIL, MECHANICAL, AND ELECTRICAL DRAWINGS FOR ITEMS REQUIRING SLEEVES AND EMBEDMENTS IN CONCRETE, WHICH ARE NOT SHOWN ON THE STRUCTURAL DRAWINGS.
4. NO STRUCTURAL MEMBER SHALL BE CUT FOR PIPES, DUCTS, ETC. UNLESS SPECIFICALLY DETAILED OR APPROVED IN WRITING BY THE ENGINEER.
5. DESIGN DETAILS AS SHOWN ON THE DRAWINGS ARE INTENDED TO BE TYPICAL AND APPLY TO ALL SIMILAR SITUATIONS OCCURRING ON THE PROJECT, WHETHER OR NOT THEY ARE SPECIFICALLY REFERENCED IN EACH LOCATION. CONSULT THE ENGINEER FOR CONCURRENCE PRIOR TO CONSTRUCTION.
6. SUBMIT DRAWINGS AND RECEIVE REVIEW OF ALL STRUCTURAL RELATED SHOP DRAWINGS PRIOR TO ERECTION OR CONSTRUCTION.
7. APPLICABLE BUILDING CODE FOR THE PROJECT IS UNIFIED FACILITIES CRITERIA, UFC 3-301-01 (2019-C1)(STRUCTURAL ENGINEERING) WHICH ADDOPTS THE 2018 EDITION OF THE INTERNATIONAL BUILDING CODE (IBC).

SITE PREPARATION NOTES

1. SITE PREPARATION NOTES FOR THIS PROJECT ARE BASED ON RECOMMENDATIONS CONTAINED IN A SOILS REPORT BY GEO ENGINEERS., DATED APRIL 20, 2023, ALONG WITH ANY ADDENDA THERETO, WHICH HAVE BEEN PREPARED FOR THIS PROJECT. A REFERENCE COPY IS AVAILABLE UPON REQUEST FROM THE ENGINEER (or IS INCLUDED IN THE APPENDIX CHAPTER OF THE SPECIFICATIONS)
2. FOOTINGS AND FOUNDATIONS AS SHOWN ON DRAWINGS MAY VARY IF THE SUBSURFACE SOIL CONDITIONS VARY FROM THOSE FOUND IN THE SOILS REPORT.
3. ALL SURFACE MATERIALS SUCH AS VEGETATION (INCLUDING THE ROOT ZONE), TOPSOIL, DEBRIS, NON-ENGINEERED FILL, BOULDERS LARGER THAN 6" AND ANY OTHER DELETERIOUS MATERIALS SHALL BE REMOVED FROM WITHIN THE BUILDING PAD AREA. THESE STRIPPED SOILS ARE CONSIDERED UNSUITABLE FOR STRUCTURAL FILL.
4. THE SUBGRADE SHALL BE PROOF ROLLED WITH HEAVY RUBBER-TIRED EQUIPMENT. ALL SOFT SPOTS SHALL BE REMOVED AND REPLACED WITH SELECT GRANULAR STRUCTURAL FILL OR OTHERWISE STABILIZED. IN WET WEATHER, IF THE EXISTING SUBGRADE MATERIALS BECOME DIFFICULT TO WORK WITH, THE EXISTING SUBGRADE MATERIALS FOR A MINIMUN OF ONE FOOT BELOW THE FOOTINGS SHALL BE REMOVED AND REPLACED WITH A WASHED CRUSHED ROCK OR SELECT GRANULAR STRUCTURAL FILL.
5. THE OWNER'S GEOTECHNICAL ENGINEER OR SPECIAL INSPECTOR SHALL OBSERVE THE NATURAL SOILS AT THE TIME OF FOOTING EXCAVATION TO DETERMINE THE SUITABLITIY OF THE NATURAL SOILS FOR SUPPORTING THE FOOTINGS.
6. SELECT GRANULAR STRUCTURAL FILL SHALL CONSIST OF WELL GRADED GRANULAR MATERIAL WITH A MAXIMUM SIZE OF 3 INCHES, AND LESS THAN 5 % FINES BASED ON THE MINUS ¾-INCH FRACTION.
7. STRUCTURAL FILL BELOW FOOTINGS AND BELOW SLAB ON GRADE SHALL BE PLACED IN MAXIMUM 8 INCH LOOSE LIFTS AND COMPACTED TO AT LEAST 95% OF MAXIMUM DENSITY AS DETERMINED BY ASTM D-1557 AND SHALL BE COMPACTED AT A MOISTURE CONTENT WITHIN 2% OF THE OPTIMUM MOISTURE CONTENT.
8. BACKFILL AROUND WALLS SHALL BE COMPACTED TO 90% OF MAXIMUM DENSTIY AS DETERMINED BY ASTM D-1557.
9. SLABS ON GRADE SHALL BE UNDERLAIN BY A MINIMUM OF 6" OF FREE-DRAINING GRANULAR MATERIAL CONSISTING OF CLEAN SAND AND GRAVEL, CRUSHED ROCK OR WASHED ROCK WITH LESS THAN 3% FINES BASED ON THE MINUS ¾-INCH SIEVE SIZE FRACTION. GRANULAR MATERIAL SHALL BE PLACED UPON PROPERLY PREPARED SUBGRADE AS DESCRIBED ABOVE.
10. COMPACTION OF STRUCTURAL FILL SHALL BE OBSERVED AND TESTED BY OWNER'S TESTING LABORATORY TO ENSURE THAT THE ABOVE REQUIREMENTS ARE ACHIEVED.

FOOTINGS

1. EXTERIOR WALL FOOTINGS SHALL BEAR AT A MINIMUM DEPTH OF 1'-6" BELOW FINISHED EXTERIOR GRADE.
2. NO FOOTINGS SHALL BE PLACED IN WATER OR ON FROZEN GROUND.
3. WHERE A PIPE PASSES THROUGH AN INTERIOR OR EXTERIOR FOUNDATION WALL, STEP THE FOOTING DOWN TO PASS BELOW PIPE AND THEN STEP BACK UP TO INDICATED ELEVATION. PROVIDE PIPE SLEEVE THROUGH FOUNDATION WALL.

CONCRETE

1. ALL CONCRETE CONSTRUCTION TO CONFORM TO ACI 318 "BUILDING CODE REQUIREMENTS FOR STRUCTURAL CONCRETE," INCLUDING BAR BENDS AND HOOKS UNLESS SPECIFICALLY DETAILED OTHERWISE ON THESE DRAWINGS.
2. THE MINIMUM COMPRESSIVE STRENGTH OF ALL STRUCTURAL CONCRETE AT 28 DAYS SHALL BE 4,000 PSI.
3. A STATEMENT OF MIX DESIGN FOR ALL CONCRETE SHALL BE SUBMITTED TO AND REVIEWED BY THE STRUCTURAL ENGINEER PRIOR TO COMMENCING WORK.
4. NON-STRUCTURAL ELEMENTS, SUCH AS ENCASEMENTS AND LEAN CONCRETE TO HAVE A MINIMUM 28-DAY COMPRESSIVE STRENGTH OF 3000 PSI.
5. USE CEMENT CONFORMING TO ASTM C595, TYPE IL (10) (MS).
6. ALL CONSTRUCTION JOINTS, EXPANSION JOINTS, AND OTHER TYPES OF JOINTS, OTHER THAN THOSE SPECIFICALLY SHOWN ON THE DRAWINGS TO BE APPROVED BY THE ENGINEER PRIOR TO PLACING CONCRETE.
7. INSTALL CONTINUOUS WATERSTOPS IN ALL EXPANSION, CONTRACTION, CONTROL AND CONSTRUCTION JOINTS OF WATER-HOLDING BASINS, CHANNELS, AND BELOW GRADE STRUCTURES UNLESS SPECIFICALLY NOTED OTHERWISE.
8. PROVIDE 3/4-INCH CHAMFER AT ALL EXPOSED EDGES AND CORNERS UNLESS NOTED OTHERWISE.
9. BEFORE PLACING THE SECOND POUR AT CONSTRUCTION JOINTS REMOVE LAITANCE, THOROUGHLY CLEAN AND ROUGHEN ALL JOINT SURFACES TO MINIMUM AMPLITUDE OF 1/4 INCH.
10. UNLESS NOTED OTHERWISE ON THE DRAWINGS, REINFORCE CONCRETE WALLS AS FOLLOWS:

WIDTH	HORIZ REINF	VERT REINF
8" WALL	#5 @ 18"	#4 @ 18" CENTER OF WALL
12" WALL	#4 @ 12", EACH FACE	#4 @ 12", EACH FACE
16" WALL	#5 @ 16", EACH FACE	#5 @ 16", EACH FACE

REINFORCEMENT STEEL

1. PROVIDE REINFORCEMENT STEEL CONFORMING TO ASTM A615, GRADE 60 EXCEPT WHERE WELDING IS PERMITTED BY THE ENGINEER. PROVIDE STEEL CONFORMING TO ASTM A706 WHEN WELDING IS PERMITTED.
2. PROVIDE WELDED WIRE FABRIC CONFORMING TO ASTM A185 FOR PLAIN REINFORCEMENT AND ASTM A497 FOR DEFORMED.
3. DIMENSIONS GIVEN FOR REINFORCING BARS ARE TO BAR CENTERS UNLESS NOTED OTHERWISE. BAR COVER IS THE CLEAR DISTANCE BETWEEN BAR AND CONCRETE SURFACE. CLEARANCE FOR REINFORCEMENT BARS PER THE FOLLOWING UNLESS SHOWN OTHERWISE:

   WHEN PLACED AGAINST GROUND ..... 3"
   FORMED SURFACES IN CONTACT WITH THE GROUND OR EXPOSED TO THE WEATHER ..... 2"
   INTERIOR WALL SURFACES ..... 1"
   ALL OTHER CONCRETE SURFACES ..... 2"
4. CONTINUE WALL CORNER AND WALL INTERSECTION REINFORCEMENT BARS AROUND CORNERS AND THROUGH COLUMNS OR PILASTERS. EXTEND REINFORCEMENT INTO CONNECTING WALLS AND LAP ON THE OPPOSITE FACE OF THE CONNECTING WALLS.
5. UNLESS OTHERWISE NOTED, ALL HOOKS SHOWN ARE 90° STANDARD HOOK AS DEFINED IN ACI 318-14.
6. LAP VERTICAL WALL BARS WITH DOWELS FROM BELOW AND EXTEND THROUGH SLABS ABOVE TO TOP FACE. BEND AND/OR LAP TO TOP SLAB REINFORCEMENT AS INDICATED.
7. UNLESS OTHERWISE INDICATED, CONTRACTOR MAY SPLICE CONTINUOUS SLAB OR LONGITUDINAL BEAM BARS AT LOCATIONS OF HIS CHOOSING, EXCEPT THAT TOP BAR SPLICES ARE TO BE LOCATED AT MIDSPAN AND BOTTOM BAR SPLICES ARE TO BE LOCATED AT SUPPORTS. MINIMUM LAP REQUIREMENTS ARE AS FOLLOWS UNLESS OTHERWISE INDICATED.

LAP LENGTHS* – CONCRETE								
BAR SIZE	#4	#5	#6	#7	#8	#9	#10	#11
CONCRETE DESIGN STRENGTH = 4000 PSI								
LAP LENGTH	1'-8"	2'-0'	2'-5"	3'-6"	4'-0"	5'-0"	6'-2"	7'-5"

*ASSUMES 2" MINIMUM CLEARANCE TO SURFACE

MASONRY

1. CONCRETE MASONRY UNITS SHALL CONFORM TO ASTM C90 GRADE N AND SHALL HAVE A MINIMUM COMPRESSIVE STRENGTH OF 2,000 PSI BASED ON THE NET SECTION.
2. PROVIDE MORTAR CONFORMING TO ASTM C270, TYPE S, HYDRATED. DO NOT USE MASONRY CEMENT.
3. PROVIDE GROUT CONFORMING TO ASTM C476 WITH A MINIMUM 28-DAY COMPRESSIVE STRENGTH OF 2,000 PSI.
4. DESIGN f'm FOR MASONRY ASSEMBLIES IS 2,000 PSI.
5. GROUT ALL CMU WALLS SOLID.
6. PLACE THE MASONRY UNITS IN RUNNING BOND UNLESS SPECIFICALLY NOTED OTHERWISE ON THE DRAWINGS.
7. MASONRY WALL REINFORCEMENT SHALL BE PLACED IN GROUTED CELLS. UNLESS NOTED OTHERWISE ON THE DRAWINGS, REINFORCE MASONRY WALLS AS FOLLOWS:

WIDTH	HORIZ REINF	VERT REINF
8" CMU	(2) #4 @ 48"	#5 @ 32" (CENTER OF WALL)
12" CMU	(2) #4 @ 48"	2 #5 @ 24"

8. ALL HORIZONTAL REINFORCING AT ENDS OF WALLS SHALL TERMINATE WITH A HOOK AROUND VERTICAL REINFORCING.
9. IN ADDITION TO HORIZONTAL REINFORCING, LADDER-TYPE REINFORCING CONSISTING OF #9 WIRE FOR EACH FACE SHELL OF EACH WYTHE SHALL BE USED AT 16" OC HORIZONTALLY IN ALL MASONRY WALLS. REINFORCEMENT SHALL BE FOR TOTAL WIDTH OF CAVITY WALLS.
10. REINFORCEMENT PROTECTION (COVER):
    A. JOINT REINFORCEMENT SHALL HAVE NOT LESS THAN 5/8" MORTAR COVERAGE FROM THE EXPOSED FACE.
    B. OTHER REINFORCEMENT SHALL HAVE A MINIMUM COVERAGE OF 2" FROM OUTSIDE FACE OF MASONRY. THERE SHALL BE A MINIMUM OF ½" GROUT BETWEEN REINFORCING STEEL AND MASONRY UNITS.
11. ALL VERTICAL REINFORCING BARS SHALL BE DOWELED TO STRUCTURE BELOW WITH BARS OF SAME SIZE AND SPACING. LAP REINFORCING BARS AS FOLLOWS UNLESS OTHERWISE NOTED ON THE DRAWINGS:

LAP LENGTHS – MASONRY (f'm = 2,000 psi)							
BAR SIZE	#3	#4	#5	#6	#7	#8	#9
SINGLE MAT (CENTER IN WALL)							
LAP LENGTH	1'-0"	1'-0"	1'-7"	3'-1"	4'-3"	MECH	MECH
DOUBLE MAT (2" MIN CLEAR FROM OUTSIDE FACE)							
LAP LENGTH	1'-0"	1'-9"	2'-10"	4'-6"	5'-3"	MECH	MECH

MECH = MECHANICAL SPLICE REQUIRED

12. AN ADDITIONAL VERTICAL BAR (MATCHING WALL REINFORCEMENT) SHALL BE PLACED AT EACH CORNER, AND ENDS OF WALLS.
13. AT ALL OPENINGS GROUT WALL SOLID FOR FULL HEIGHT AT JAMBS OF OPENINGS, ONE CELL FOR EACH 4'-0" OF SPAN OR PORTION THEREOF (EXAMPLE: FOR 6'-0" SPAN, GROUT TWO CELLS AT EACH SIDE OF OPENING). REINFORCE EACH GROUTED CELL WITH STANDARD VERTICAL WALL REINFORCING BARS, TYPICAL, U.N.O.
14. AT MASONRY BEAMS ABOVE OPENINGS HORIZONTAL REINFORCING BARS IN THE BOTTOM OF THE MASONRY BEAM SHALL EXTEND 2'-0" BEYOND THE EDGE OF THE OPENING OR SHALL BE HOOKED IF REQUIRED. DO NOT SPLICE HORIZONTAL TOP AND/OR BOTTOM REINFORCING BARS IN MASONRY BEAM, TYPICAL, U.N.O.
15. MASONRY BEAMS SHALL BE BUILT AS AN INTEGRAL PART OF THE SUPPORT. NO TOOTHING OR DOWELLING ONLY WILL BE PERMITTED AT SUPPORTS.
16. AT SMALL OPENINGS IN MASONRY WALLS (NOT SHOWN ON DRAWINGS) PROVIDE (1) #5 ON ALL SIDES OF OPENINGS WITH A MINIMUM PROJECTION OF 2'-0" BEYOND EDGES.
17. STOP GROUT POURS 1/2" BELOW TOP OF BLOCK UNITS BETWEEN GROUT LIFTS.
18. ALL ANCHOR BOLTS TO BE PLACED IN GROUTED CELLS.

STRUCTURAL STEEL

1. UNLESS NOTED OTHERWISE, PROVIDE STRUCTURAL STEEL CONFORMING TO ASTM A36. ROLLED WIDE FLANGE SHAPES TO CONFORM TO ASTM A992. PIPE TO CONFORM TO ASTM A53, TYPE E OR S, GRADE B. STRUCTURAL TUBING TO CONFORM TO ASTM A1085. FABRICATE AND ERECT ALL STRUCTURAL STEEL IN CONFORMANCE WITH AISC SPECIFICATIONS.
2. USE A325 OR F1852 BOLTS FOR STEEL TO STEEL CONNECTIONS, F1554 GR36 FOR ANCHOR BOLTS, AND A307 BOLTS FOR ALL OTHER CONNECTIONS (UNLESS SPECIFIED OTHERWISE ON DRAWINGS). USE 3/4" DIAMETER MINIMUM.
3. ALL HIGH-STRENGTH BOLTS SHALL BE INSTALLED IN ACCORDANCE WITH AISC "SPECIFICATIONS FOR STRUCTURAL JOINTS USING ASTM A325 OR A490 BOLTS." THE TURN-OF-NUT METHOD MAY BE USED. PROVIDE CARBONIZED WASHERS UNDER THE TURNED ELEMENT.
4. USE ONLY CERTIFIED WELDERS FOR ALL WELDING WORK. USE FILLER METAL HAVING A MINIMUM TENSILE STRENGTH OF 70 KSI AND PERFORM ALL WORK IN ACCORDANCE WITH THE CURRENT STRUCTURAL WELDING CODE (AWS D1.1).
5. UNLESS OTHERWISE NOTED, COAT ALL STRUCTURAL STEEL COMPONENTS WITH PAINT OR OTHER PROTECTIVE COATINGS AS SPECIFIED IN THE PROJECT SPECIFICATIONS.
6. MINIMUM THICKNESS FOR GUSSET PLATES IS 3/8 INCH.
7. STRUCTURAL STEEL, WHICH IS TO BE EMBEDDED INTO CONCRETE TO BE CLEAN AND FREE OF PAINT, OIL, OR DIRT.

LUMBER

6. SAWN FRAMING LUMBER SHALL COMPLY WITH THE LATEST EDITION OF THE GRADING RULES OF THE WESTERN WOOD PRODUCTS ASSOCIATION (WWPA) OR THE WEST COAST LUMBER INSPECTION BUREAU (WCLIB). ALL SAWN LUMBER SHALL BE STAMPED WITH THE GRADE MARK OF AN APPROVED LUMBER GRADING AGENCY. SAWN LUMBER SHALL HAVE THE FOLLOWING MINIMUM GRADE, UNLESS NOTED OTHERWISE IN CONSTRUCTION DOCUMENTS.

MEMBER	DESIGNATION
WALL STUDS	DF/L STUD OR #2
TIMBER BEAMS & HEADERS	DF/L #1 & BTR
WALL PLATES & OTHER STRUCTURAL SAWN MEMBERS NOT SPECIFIED ABOVE	DF/L CONSTRUCTION

1. LUMBER RESTING ON CONCRETE AT GRADE SHALL BE TREATED WITH A PRESERVATIVE IN ACCORDANCE WITH AMERICAN WOOD PROTECTION ASSOCIATION (AWPA) REQUIREMENTS. FIELD TREATMENT OF END CUTS AND BORINGS IS REQUIRED ON MEMBERS OVER 2-IN THICK. FASTENERS IN PERSERVATIVE-TREATED WOOD SHALL BE STAINLESS STEEL OR HOT-DIPPED GALVANIZED IN ACCORDANCE WITH MANUFACTURE REQUIREMENTS OF TREATED LUMBER.
2. WOOD CONNECTORS SHOWN ON THESE DRAWINGS SHALL BE PRODUCTS OF SIMPSON STRONG-TIE, INC. UNLESS NOTED OTHERWISE. HARDWARE BY OTHER MANUFACTUERES MAY BE USED PROVIDED THEY ARE OF EQUIVALENT CAPACITY AND HAVE CURRENT ICC-ES APPROVALS. SUBSTITUTIONS MUST BE APPROVED BY THE STRUCTURAL ENGINEEER. INSTALL ALL CONNECTORS WITH ALL FASTENERS REQUIRED BY THE MANUFACTURER'S SPECIFICATIONS UNLESS NOTED OTHERWISE.
3. ALL STRUCTURAL WOOD PANELS SHALL BE STRUCTURAL II APA RATED SHEATHING, AND SHALL BE THE FOLLOWING NOMINAL THICKNESS AND SPAN RATING, UNLESS NOTED OTHERWISE:

THICKNESS	SPAN RATING
19/32"	40 / 20

4. FULL WIDTH SHEATHING PANELS SHALL BE USED WHENEVER POSSIBLE.

EPOXY ANCHORS

1. EPOXY ANCHORS SHALL BE AN ADHESIVE ANCHOR SYSTEM AS LISTED BELOW:
   A. HILTI HIT-HY 200 OR HIT-RE 500 V3
   B. ITW RED HEAD C6+, A7+ OR G5
   C. SIMPSON AT, SET OR SET-3G
1. ANCHOR RODS SHALL BE ASTM A193 GRADE B7, DIAMETER AS INDICATED ON DRAWINGS, THREADED AND GALVANIZED.

DEFERRED SUBMITTALS

1. DEFERRED SUBMITTALS ARE DEFINED AS THOSE PORTIONS OF THE DESIGN THAT ARE NOT SUBMITTED AT THE TIME OF THE APPLICATION AND THAT ARE TO BE SUBMITTED TO THE BUILDING OFFICIAL WITHIN A SPECIFIED PERIOD. FOR THIS PROJECT THE FOLLOWING ARE DEFERRED SUBMITTALS;
   A. METAL PLATED WOOD TRUSSES

LOADING CRITERIA

1. BUILDING RISK CATEGORY — VI
2. DEAD LOAD — CALCULATED FROM UNIT WEIGHT
3. LIVE LOADS:
   ALL FLOORS / SLABS NOT INDICATED — 100 PSF
   ROOF LIVE LOAD — 20 PSF
4. WIND LOAD:
   BASIC WIND SPEED — 115 MPH
   EXPOSURE — C
5. SNOW LOAD:
   FLAT ROOF SNOW LOAD — 25 PSF
6. SEISMIC LOAD:
   PROCEDURE: EQUIVALENT LATERAL FORCE
   SITE CLASS: — D
   IMPORTANCE FACTOR: — 1.5
   SEISMIC DESIGN CATEGORY: — D
   SPECTRAL RESPONSE COEF:
   S_{DS} — 0.895g
   S_{D1} — 0.863g
   BASIC SEISMIC-FORCE-RESISTING SYSTEM:
   SPECIAL REINFORCED MASONRY SHEAR WALLS
   R = 5, OMEGA = 2.5, C_d = 3.5
7. FROST DEPTH: — 18 INCHES
8. ALLOWABLE SOIL BEARING CAPACITY — 3,000 PSF

AMERICAN WATER
Military Services
Joint Base Lewis-McChord

BOWEN COLLINS & ASSOCIATES

90% REVIEW

NOT FOR CONSTRUCTION
FOR REVIEW ONLY

NO.	DATE	REV. BY	DESCRIPTION

REVISIONS

AMERICAN WATER (P4-A60MWA2-00002)
WELL 13 REPLACEMENT
FOR AMERICAN WATER MILITARY SERVICES

VERIFY SCALE
BAR IS ONE INCH ON ORIGINAL DRAWING

REVIEW
CHECKED
APPROVED S. COHEN

DESIGN
DESIGN S. COHEN
DRAWN P. BAXTER

STRUCTURAL
WELL 13
GENERAL STRUCTURAL NOTES - 1

DATE: DECEMBER 2023
PROJECT NUMBER 427-22-02

DRAWING NO.
GS-01

P:\American Water\427-22-01, 02, 03 JBLM Wells\2.0 Design Phase\2.9 Drawings\sht\Well 13\427202_GS-01.dwg Plotted: 12/27/2023 12:57 PM By: Preston Baxter

GENERAL STRUCTURAL NOTES

SPECIAL INSPECTIONS

1. SPECIAL INSPECTION IN ACCORDANCE WITH APPROPRIATE SECTIONS OF IBC 2018, CHAPTER 17 IS REQUIRED FOR THE PROJECT.
2. THE SPECIAL INSPECTOR SHALL SUBMIT A FINAL SIGNED REPORT STATING WHETHER THE WORK REQUIRING SPECIAL INSPECTION WAS, TO THE BEST OF THE INSPECTOR'S KNOWLEDGE, IN CONFORMANCE WITH THE APPROVED PLANS AND SPECIFICATIONS AND THE APPLICABLE WORKMANSHIP PROVISIONS OF THE CODE, TO THE BUILDING OFFICIAL AND THE ENGINEER.
3. A CERTIFICATE OF COMPLIANCE FOR OFF-SITE FABRICATION SHALL BE COMPLETED AND SUBMITTED TO THE BUILDING OFFICIAL FOR APPROVAL PRIOR TO ERECTION OF PREFABRICATED COMPONENTS. SPECIAL INSPECTION REQUIRED PER IBC SECTION 1704.2.
4. SPECIAL INSPECTION ITEMS REQUIRED PER LIST BELOW. CONTINUOUS OR PERIODIC INSPECTIONS IS DESIGNATED WITH A (C) OR (P).

CONCRETE: (TABLE 1705.3, 2018 IBC)

A. PLACING REINFORCEMENT STEEL. ---------- P
B. WELDING REINFORCEMENT STEEL (IF APPROVED BY ENGINEER). ---------- C
C. PLACING ANCHOR BOLTS AND EMBEDDED PLATES. ---------- P
D. VERIFY APPLICABLE CONCRETE MIX BEING USED. ---------- P
E. SAMPLING CONCRETE FOR STRENGTH TESTS. ---------- C
F. CURING TECHNIQUES AND APPLICATION. ---------- P

MASONRY (LEVEL B): (TMS 402/ACI 530/ASCE 5 AND TMS 602/ACI 530.1/ASCE 6)

A. VERIFICATION OF APPROVED SUBMITTAL DOCUMENTS FOR MATERIALS. ---------- P
B. VERIFICATION OF PROPORTIONS OF SITE-PREPARED MORTAR AND GROUT. ---------- P
C. PREPARATION OF REQUIRED GROUT AND MORTAR SPECIMENS AND PRISMS. ---------- P
D. PLACEMENT OF MASONRY UNITS AND JOINTS. ---------- P
E. GROUT SPACE PRIOR TO GROUTING. ---------- P
F. PLACEMENT OF GROUT. ---------- C
G. VERIFY SIZE AND LOCATION OF STRUCTURAL ELEMENTS. ---------- P
H. VERIFY TYPE, SIZE, AND LOCATION OF ANCHORS. ---------- P
I. VERIFY SIZE, TYPE, AND LOCATION OF REINFORCEMENT. ---------- P
J. VERIFY PROTECTION OF MASONRY DURING COLD AND HOT WEATHER. ---------- P

SOILS: (IBC TABLE 1705.6)

A. VERIFY MATERIALS BELOW FOOTINGS ARE ADEQUATE FOR FOOTING SUPPORT. ---------- P
B. VERIFY EXCAVATIONS ARE TO PROPER DEPTH. ---------- P
C. VERIFY PROPERTIES OF COMPACTED FILL PRIOR TO PLACEMENT MEET REQUIREMENTS OF PROJECT. ---------- P
D. PRIOR TO PLACEMENT OF COMPACTED FILL OBSERVE SUBGRADE AND VERIFY THAT THE SITE HAS BEEN PREPARED PROPERLY. ---------- P
E. VERIFY PROPER USE OF COMPACTED FILL INCLUDING PROPER MATERIALS, COMPACTION DENSITIES AND LIFT THICKNESS. ---------- C

STRUCTURAL OBSERVATION

BOWEN COLLINS & ASSOCIATES SHALL BE NOTIFIED BY THE CONTRACTOR 5 BUSINESS DAYS BEFORE THE COMPLETION OF THE ITEMS LISTED IN THIS SECTION SO THAT STRUCTURAL OBSERVATION MAY BE PERFORMED IN ACCORDANCE WITH IBC SECTION 1704.5. THE OBSERVATIONS WILL BE PERFORMED AT THE DISCRETION OF BOWEN COLLINS & ASSOCIATES. COMPLETED OBSERVATION REPORTS WILL BE SUBMITTED TO THE BUILDING OFFICIAL.

1. MASONRY REINFORCING BEFORE FIRST GOURT PLACEMENT.
2. WOOD ROOF FRAMING BEFORE PLACEMENT OF ROOFING MATERIALS.

PRE-MANUFACTURED ROOF TRUSS NOTES

1. PRE-MANUFACTURED METAL PLATED WOOD TRUSSES SHALL BE MANUFACTERED AS SPECIFIED IN ANSI/TPI 1. MANUFACTURER OF TRUSSES USING METAL PLATE CONNECTORS SHALL RETAIN AN APPROVED AGENCY TO MAKE NONSCHEDULED INSPECTIONS OF TRUSS MANUFACTURING AND DELIVERY OPERATIONS. THE INSPECTION SHALL COVER ALL PHASES OF TRUSS OPERATIONS, INCLUDING LUMBER STORAGE, HANDLING, CUTTING FIXTURES, PRESSES OR ROLLERS, MANUFACTURING, BUNDLING AND BANDING.
2. THE TRUSS FABRICATOR SHALL BE RESPONSIBILE FOR DETERMINING THE SIZE AND GRADE LUMBER REQUIRED FOR EACH TRUSS MEMBER. WHERE MEMBER SIZE IS INDICATED ON THE DRAWINGS THE FABRICATOR SHALL DETERMINE THE REQUIRED GRADE LUMBER. GRADES INDICATED ON DRAWINGS ARE MINIMUMS ONLY.
3. PRIOR TO FABRICATION, THE TRUSS FABRICATOR SHALL SUBMIT DESIGN CALCULATIONS AND SHOP DRAWINGS FOR EACH TRUSS TO THE ENGINEER FOR REVIEW. CALCULATIONS SHALL INCLUDE, MEMBER LOADS, FORCES AND CRITICAL STRESSES, AND MID-SPAN DEFLECTIONS. CALCULATIONS AND DRAWINGS SHALL ALSO INDICATE TYPE AND LOCATION OF BRACING REQUIRED BOTH DURING CONSTRUCTION AND PERMANENTLY. CALCULATIONS SHALL BEAR THE STAMP OF A LICENSED PROFESSIONAL ENGINEER IN THE STATE OF WASHINGTON.
4. MOMENT COEFFICIENTS USED IN THE TRUSS DESIGN SHALL BE 1/8 FOR ONE AND TWO SPAN CONDITIONS AND 1/10 FOR THREE OR MORE SPANS. THE EFFECTIVE LENGTH FACTOR USED FOR WEBS SHALL BE 1.0.
5. TOOTHED METAL PLATES AT CONNECTOR JOINTS SHALL BE DESIGNED FOR THE FULL-MEMBER DESIGN LOADS WITHOUT CONSIDERING WOOD TO WOOD BEARING. A STRESS INCREASE FOR THE VALUE OF A CONNECTOR WILL NOT BE ALLOWED IN ANY CIRCUMSTANCE. NET AREA OF METAL GUSSET PLATES SHALL BE LARGER BY 25% THAN THAT REQUIRED BY CALCULATED STRESSES. INCREASED PLATE SIZE SHALL BE MADE BY INCREASING THE PLATE DIMENSION IN EACH DIRECTION. THE AREA UNDERNEATH THE GUSSET PLATE FOR A DISTANCE OF ½" ON EITHER SIDE OF CONNECTORS SHALL BE BALANCED ON THE JOINT AS STRESSES REQUIRE AND DIMENSIONED AS TO THEIR LOCATION. ONLY ONE CONNECTION PER JOINT PER SIDE WILL BE ALLOWED.
6. MINIMUM SIZE OF ANY CONNECTOR SHALL BE 15 SQ. IN. MINIMUM BITE OF ANY GUSSET PLATE ON A TRUSSED MEMBER SHALL BE 2½".
7. SPLICES IN TOP AND BOTTOM CHORDS SHALL OCCUR AT A JOINT OR WITHIN ONE-QUARTER OF THE SPAN OF A PANEL OF THE TRUSS. EACH SECTION OF THE CHORD MEMBER SHALL BE INVOLVED IN TWO JOINTS PRIOR TO BEING SPLICED.
8. ALL CONTINUOUS LATERAL BRACING SHALL BE LATERALLY SUPPORTED AT EACH END BY ANCHORING BRACING MEMBER TO END WALLS OR BY PROVIDING A DIAGONAL BRACE AT EACH END OF BRACING MEMBER AND AT 20'-0" INTERVALS.
9. THE FOLLOWING DESIGN CRITERIA SHALL BE USED:

TOP CHORD SNOW LOAD	= 25 PSF (DURATION FACTOR = 1.00)
TOP CHORD DEAD LOAD	= 12 PSF
BOT CHORD DEAD LOAD	= 8 PSF
BOT CHORD LIVE LOAD	= (10.0) PSF (W/O TOP CHORD SNOW LOAD)
TOTAL	= 45 PSF

10. THE TRUSSES SHALL BE DESIGNED FOR BOTH BALANCED AND UNBALANCED LOAD CASES. FOR THE UNBALANCED LOAD CASE THE WINDWARD SIDE SHALL HAVE NO SNOW LOAD AND THE LEEWARD SIDE SHALL USE 30 PSF.

MASONRY WALL SCHEDULE

MARK	THICK	VERTICAL REINF			HORIZONTAL REINF			NOTES
		NO	SIZE	SPACING	NO	SIZE	SPACING	
MW-1	8"	1	#5	32" OC	1	#5	48" OC	
MW-2	12"	1	#5	24" OC	2	#4	48" OC	

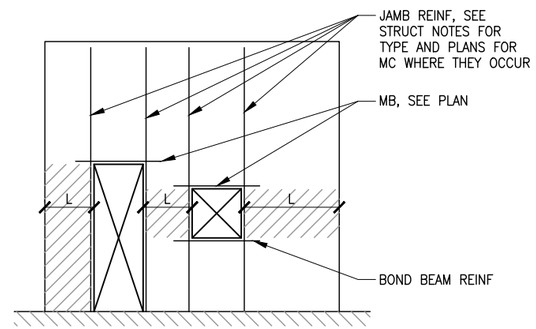

L	MAXIMUM BOND BEAM SPACING
0'-8" TO 3'-4"	8"
4'-0" TO 5'-4"	16"
6'-0" TO 7'-4"	24"
8'-0" TO 9'-4"	32"
10'-0" TO 11'-4"	40"
12'-0" OR LARGER	48"

MASONRY BOND BEAM NOTES:

1. BOND BEAM SPACING SHALL NOT EXCEED DISTANCE INDICATED BY TABLE INSIDE HATCHED AREAS. (EX: IF L=4'-8", BOND BEAMS SHALL NOT EXCEED 16" OC).
2. REGIONS OUTSIDE THE HATCHED ZONES MAY BE REINFORCED WITH REINFORCING INDICATED IN GENERAL NOTES OR SCHEDULE.
3. WHERE BOND BEAM REINFORCING SPACING IS ½ OR LESS THAN THAT REQUIRED BY THE WALL SCHEDULE, BOND BEAM REINFORCING MAY BE REDUCED BY 1/2.
4. ALL HORIZONTAL REINFORCING SHALL TERMINATE WITH A STANDARD HOOK AROUND VERTICAL REINFORCING.

MASONRY BOND BEAM SPACING

MASONRY WALL SCHEDULE
NOT TO SCALE

MASONRY BEAM SCHEDULE

MARK	WIDTH	DEPTH	REINFORCEMENT			NOTES
			BOTTOM HORIZONTAL	TOP HORIZONTAL	VERTICAL	
MB-1	12"	32"	2 #5	2 #5	WALL	
MB-2	12"	16"	2 #5	–	WALL	
MB-3	12"	24"	2 #5	2 #5	WALL	
MB-4	8"	24"	1 #5	1 #5	WALL	

MASONRY BEAM NOTES

1. VERTICAL WALL REINFORCEMENT (SIZE AND SPACING) SHALL BE USED FOR STIRRUPS, UNO. VERTICAL REINFORCEMENT SHALL END WITH A STANDARD ACI 180° HOOK AND SCHEDULED LAP WITH VERTICAL REINFORCEMENT ABOVE BEAM. WHERE NO WALL OCCURS ABOVE BEAM OR LAP IS NOT POSSIBLE, PROVIDE 180° STD HOOK AT TOP.
2. GROUT BEAMS SOLID FOR DEPTH SHOWN IN SCHEDULE.
3. TOP BARS SHALL EXTEND THE GREATER OF 24" OR A STANDARD LAP BEYOND FACE OF SUPPORTS (OR SHALL BE HOOKED IF REQUIRED). IF TOP BARS NEED TO BE SPLICED, SPLICE SHALL OCCUR AT MID-SPAN. BOTTOM BARS SHALL EXTEND A STANDARD LAP BEYOND THE FACE OF SUPPORTS AND BE SPLICED OVER SUPPORTS IF THERE IS AN ADJACENT MASONRY BEAM.
4. WHERE MORE THAN TWO HORIZONTAL BARS ARE REQUIRED IN EITHER THE TOP OR BOTTOM OF THE MASONRY BEAM THE ADDITIONAL BARS SHALL BE PLACED IN THE ADJACENT COURSES.
5. NO MECHANICAL, ELECTRICAL, PLUMBING OR OTHER OPENINGS SHALL BE PLACED IN OR THRU THE SOLID GROUTED MASONRY BEAM DEPTH.
6. REINFORCING INDICATED IN BEAM SCHEDULE IS IN ADDITION TO SCHEDULED HORIZONTAL AND VERTICAL WALL REINFORCING.
7. AT OPENINGS NOT SHOWN ON STRUCTURAL DRAWINGS (I.E. MECHANICAL OPENINGS) USE MASONRY BEAMS OF SIMILAR SIZE AND REINFORCING AS SHOWN IN THOSE WALLS FOR EQUIVALENT WIDTH OPENINGS. AS A MINIMUM USE:

   OPENINGS UP TO 4'-0", USE MB – 2
   OPENINGS UP TO 6'-8", USE MB – 3

   FOR CONDITIONS WHICH ARE OUTSIDE OF THESE GUIDELINES CONTACT THE ENGINEER.
8. WALLS ABOVE SCHEDULED BEAMS SHALL HAVE MINIMUM REINFORCING AS PER STRUCTURAL NOTES, TYPICAL, UNO.

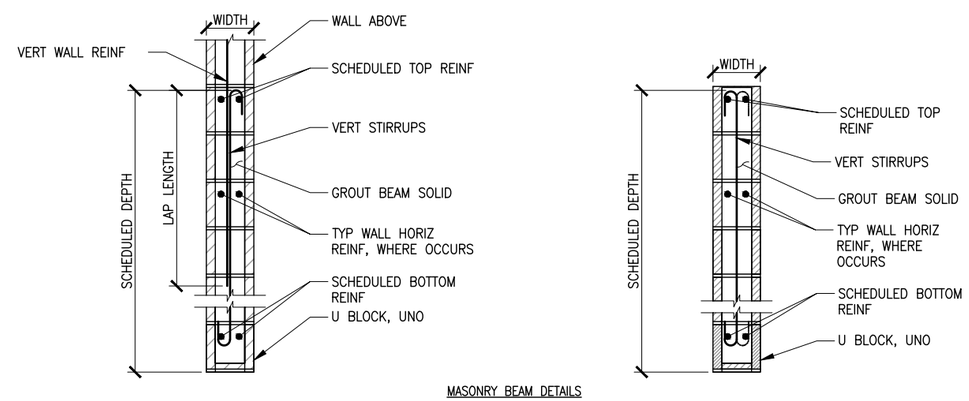

MASONRY BEAM DETAILS

MASONRY BEAM DETAILS
NOT TO SCALE

AMERICAN WATER
Military Services
Joint Base Lewis-McChord

BOWEN COLLINS & ASSOCIATES

90% REVIEW

NOT FOR CONSTRUCTION
FOR REVIEW ONLY

NO.	DATE	REV. BY	DESCRIPTION

REVISIONS

AMERICAN WATER (P4-A60MWA2-00002)
WELL 13 REPLACEMENT
FOR AMERICAN WATER MILITARY SERVICES

VERIFY SCALE
BAR IS ONE INCH ON ORIGINAL DRAWING

REVIEW
CHECKED
APPROVED

DESIGN
DESIGN
DRAWN

STRUCTURAL
WELL 13
GENERAL STRUCTURAL NOTES - 2

PROJECT NUMBER 427-22-02
DATE: DECEMBER 2023

DRAWING NO.
GS-02

SHEET 47 OF 60

P:\American Water\427-22-01, 02, 03 JBLM Wells\2.0 Design Phase\2.9 Drawings\shit\Well 13\427ZZ02_GS-02.dwg Plotted: 12/27/2023 12:58 PM By: Preston Baxter

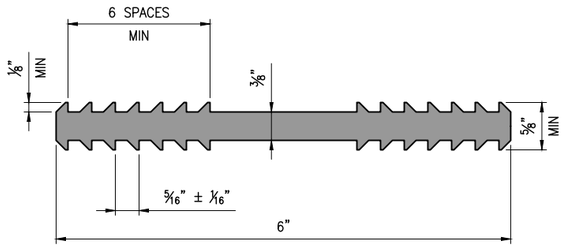

WATERSTOP
NOT TO SCALE
S 4001

NOTE: WATERSTOP IS PREFORMED PLASTIC ADHESIVE TYPE.

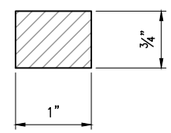

WATERSTOP
NOT TO SCALE
S 4005

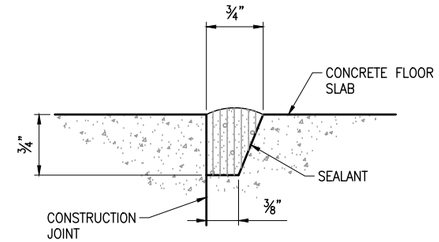

NOTE:
1. AT CONTRACTOR'S OPTION, SEALANT GROOVES MAY CONTINUE STRAIGHT ACROSS CONSTRUCTION JOINT INTERSECTION OR BE STAGGERED UPON APPROVAL OF THE ENGINEER.
2. NO BOND BREAKER WHERE SEALANT GROVE IS CONSTRUCTED.

SEALANT
NOT TO SCALE
S 4007

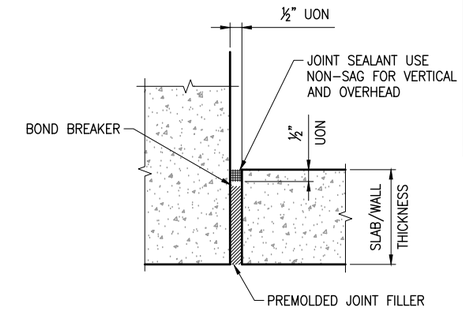

NOTE:
DISCONTINUE ALL REINFORCING AT JOINT.
REINFORCING IS NOT SHOWN FOR CLARITY.

EXPANSION JOINT
NOT TO SCALE
S 4012

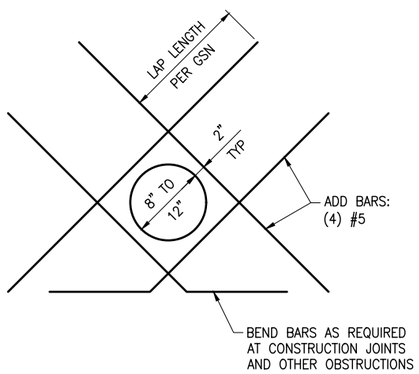

DETAIL NOTES:

1. THIS DETAIL TO BE USED WHEN CALLED FOR ON THE DRAWINGS OR WHEN NO OTHER DETAIL IS SPECIFIED.
2. CUT NORMAL REINFORCING 2" CLEAR OF OPENING.
3. DIAGONAL BARS TO BE PLACED:
   - AT CENTERLINE OF WALL OR SLAB WHERE SINGLE MAT OF REINFORCEMENT IS PROVIDED.
   - AT EACH FACE OF WALL OR SLAB WHERE TWO MATS OF REINFORCEMENT ARE PROVIDED.
   - NO ADDITIONAL REINFORCING REQUIRED FOR OPENINGS SMALLER THAN 8".

DIAGONAL REINFORCEMENT AT CIRCULAR OPENINGS
NOT TO SCALE
S 4030

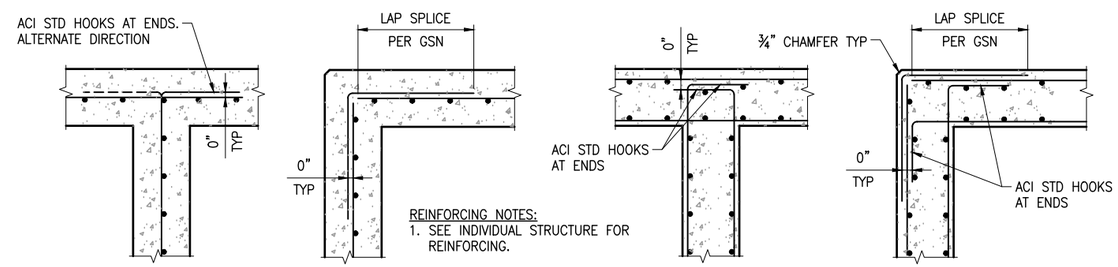

REINFORCING NOTES:
1. SEE INDIVIDUAL STRUCTURE FOR REINFORCING.
2. DETAIL IS TYPICAL AT ALL CONCRETE CORNERS AND INTERSECTIONS UNLESS SHOWN OTHERWISE.

SINGLE-CURTAIN REINFORCING

DOUBLE-CURTAIN REINFORCING

WALL REINFORCING AT CORNERS AND JUNCTIONS
NOT TO SCALE
S 4039

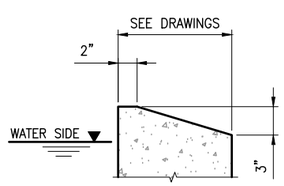

CONCRETE WEIR
NOT TO SCALE
S 4043

AMERICAN WATER
Military Services
Joint Base Lewis-McChord

BOWEN COLLINS & ASSOCIATES

90% REVIEW

NOT FOR CONSTRUCTION
FOR REVIEW ONLY

NO.	DATE	REV. BY	DESCRIPTION

REVISIONS

AMERICAN WATER (P4-A60MWA2-00002)
WELL 13 REPLACEMENT
FOR AMERICAN WATER MILITARY SERVICES

VERIFY SCALE
BAR IS ONE INCH ON ORIGINAL DRAWING

REVIEW
CHECKED
APPROVED S. COHEN

DESIGN
DESIGN S. COHEN
DRAWN P. BAXTER

STRUCTURAL
WELL 13
GENERAL STRUCTURAL DETAILS - 1

PROJECT NUMBER 427-22-02
DATE: DECEMBER 2023

DRAWING NO.
GS-03

SHEET 48 OF 60

P:\American Water\427-22-01, 02, 03 JBLM Wells\2.0 Design Phase\2.9 Drawings\sht\Well 13\4272202_GS-03.dwg Plotted: 12/27/2023 1:00 PM By: Preston Baxter

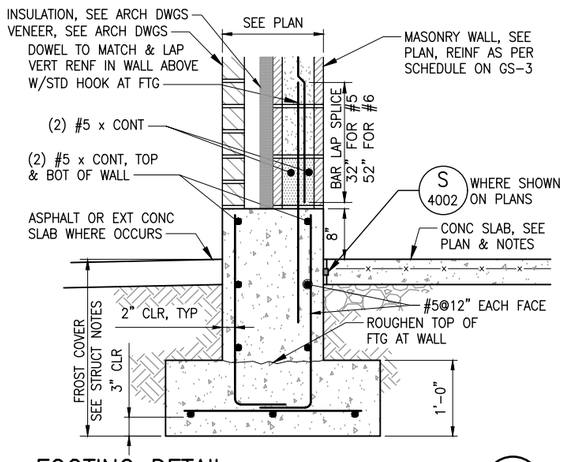

FOOTING DETAIL

NOT TO SCALE — S 4051

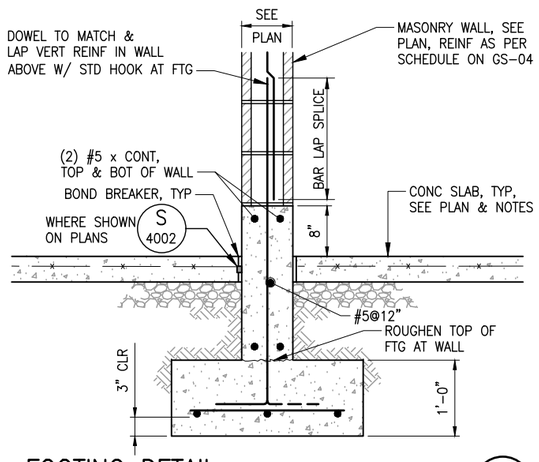

FOOTING DETAIL

NOT TO SCALE — S 4052

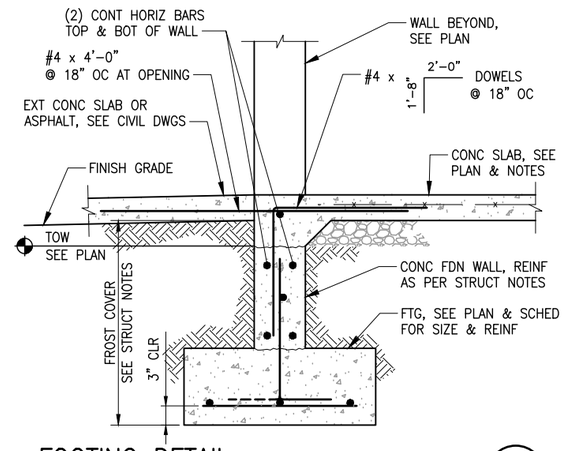

FOOTING DETAIL

NOT TO SCALE — S 4053

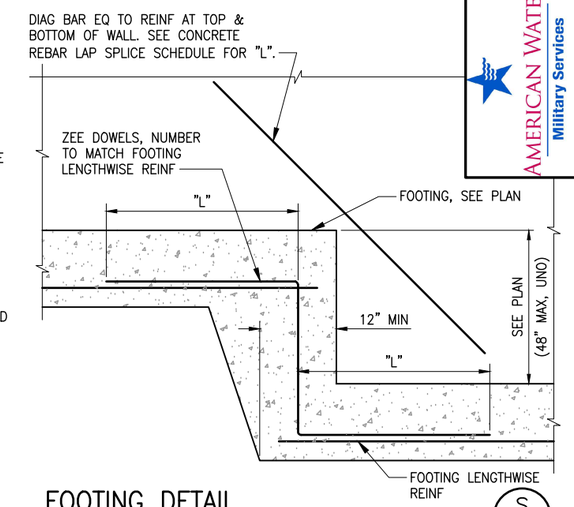

FOOTING DETAIL

NOT TO SCALE — S 4061

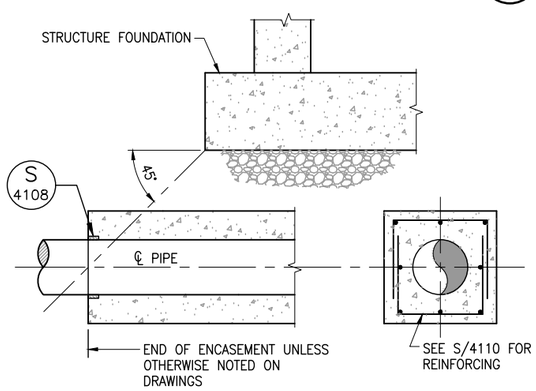

PIPE ENCASEMENT END

NOT TO SCALE — S 4107

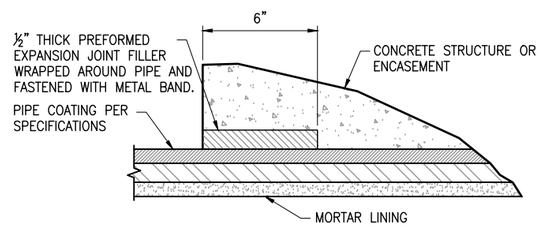

PIPE ENCASEMENT END

NOT TO SCALE — S 4108

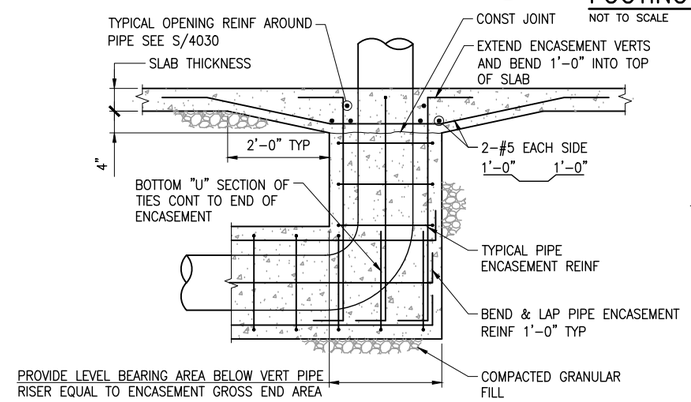

ELEVATION

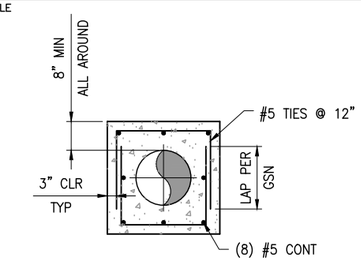

SECTION

PIPE ENCASEMENT UNDER STRUCTURES

NOT TO SCALE — S 4110

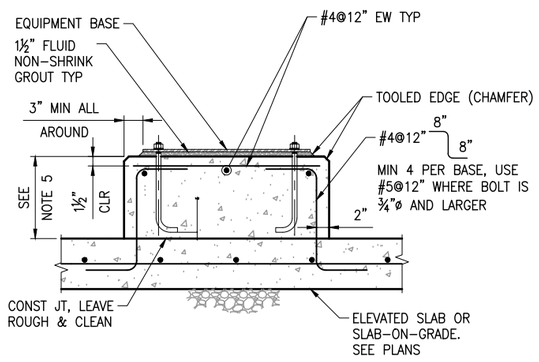

TYPE A

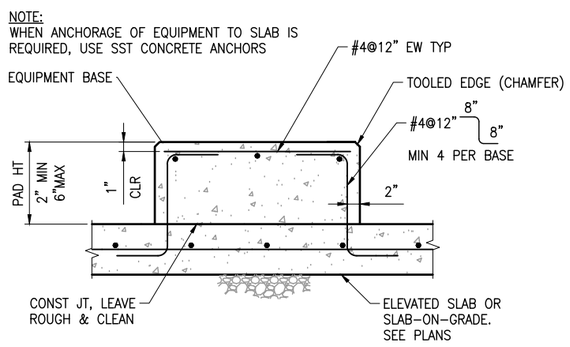

TYPE B

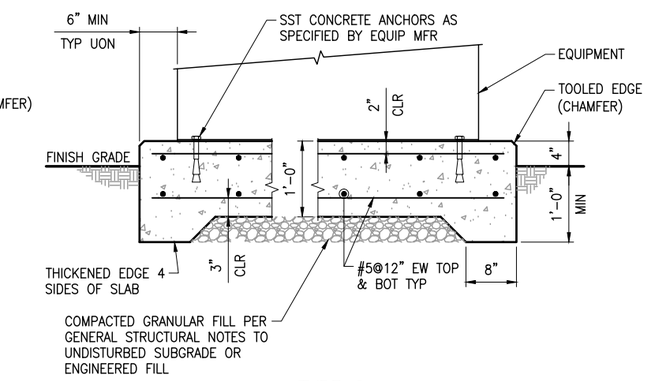

TYPE C

EQUIPMENT PAD NOTES

1. PAD SIZE SHALL BE MINIMUM INDICATED OR AS SHOWN ON THE DRAWINGS. VERIFY ALL PAD SIZE REQUIREMENTS WITH EQUIPMENT SHOP DRAWINGS OF ACTUAL EQUIPMENT FURNISHED AND OBTAIN ENGINEER'S APPROVAL OF FINAL DIMENSIONS.
2. THE SIZE, NUMBER, TYPE, LOCATION, AND THREAD PROJECTION OF THE ANCHOR BOLTS SHALL BE DETERMINED BY THE EQUIPMENT MANUFACTURER, AND SHALL BE AS APPROVED BY THE ENGINEER. ANCHOR BOLTS SHALL BE HELD IN POSITION WITH TEMPLATES MATCHING THE EQUIPMENT BASE PLATE, WHILE PAD IS BEING POURED.
3. INSTALL EQUIPMENT BASES LEVEL UNLESS SPECIFIED OTHERWISE.
4. WEDGES OR SHIMS SHALL BE USED TO SUPPORT THE BASE WHILE THE NON-SHRINK GROUT IS PLACED. TEMPORARY LEVELING NUTS SHALL BE BACKED OFF. IF LEFT IN PLACE, THE WEDGES AND SHIMS SHALL NOT BE EXPOSED TO VIEW.
5. HEIGHT OF PADS SHALL BE MINIMUM REQUIRED FOR ANCHOR BOLT CLEARANCE. COORDINATE ANCHOR BOLT LENGTH WITH EQUIPMENT MANUFACTURER.

EQUIPMENT PAD DETAILS

NOT TO SCALE — S 4113

AMERICAN WATER Military Services Joint Base Lewis-McChord

BOWEN COLLINS & ASSOCIATES

90% REVIEW

NOT FOR CONSTRUCTION FOR REVIEW ONLY

NO.	DATE	REV. BY	DESCRIPTION

REVISIONS

AMERICAN WATER (P4-A60MWA2-00002)
WELL 13 REPLACEMENT
FOR AMERICAN WATER MILITARY SERVICES

VERIFY SCALE
BAR IS ONE INCH ON ORIGINAL DRAWING

REVIEW
CHECKED
APPROVED S. COHEN

DESIGN
DESIGN S. COHEN
DRAWN P. BAXTER

STRUCTURAL
WELL 13
GENERAL STRUCTURAL DETAILS - 2

PROJECT NUMBER 427-22-02
DATE: DECEMBER 2023

DRAWING NO.
GS-04

SHEET 49 OF 60

P:\American Water\427-22-01, 02, 03 JBLM Wells\2.0 Design Phase\2.9 Drawings\shit\Well 13\4272202_GS-04.dwg Plotted: 12/27/2023 1:00 PM By: Preston Baxter

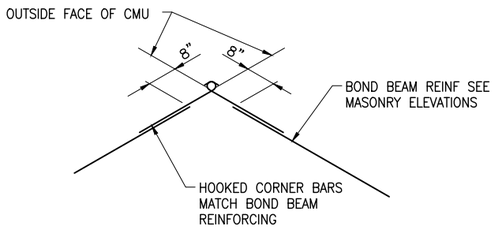

"L" = 1'-8" FOR #4 BAR
"L" = 2'-4" FOR #5 BAR
"L" = 4'-0" FOR #6 BAR

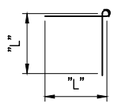

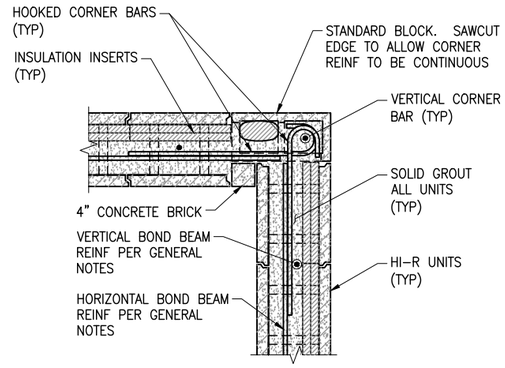

BOND BEAM CORNER DETAIL

NOT TO SCALE

S 4201

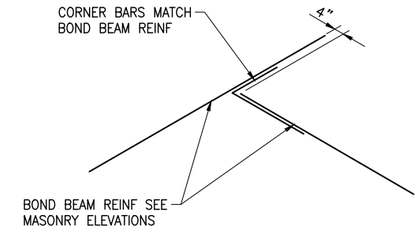

"L" = 1'-8" FOR #4 BAR
"L" = 2'-4" FOR #5 BAR
"L" = 4'-0" FOR #6 BAR

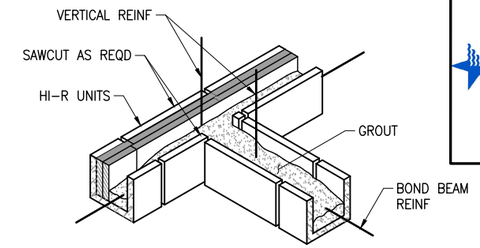

BOND BEAM INTERSECTION DETAIL

NOT TO SCALE

S 4204

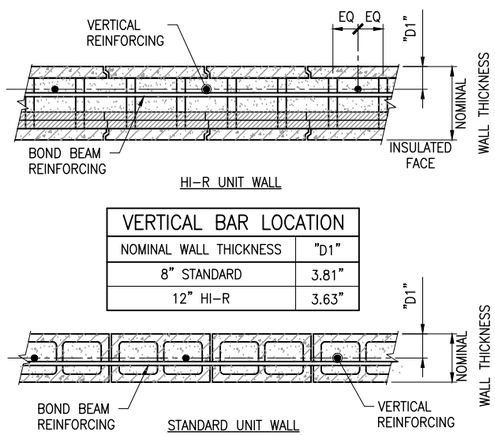

VERTICAL BAR LOCATION	
NOMINAL WALL THICKNESS	"D1"
8" STANDARD	3.81"
12" HI-R	3.63"

VERTICAL WALL STEEL LOCATION

NOT TO SCALE

S 4205

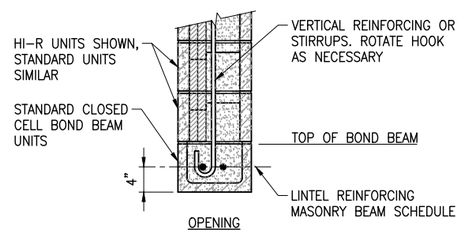

DETAIL NOTES:

1. NO LAPS ALLOWED IN BEAM REINFORCING WITHIN 2'-0" OF EDGE OF OPENING.

LINTEL BEAM SECTION

NOT TO SCALE

S 4206

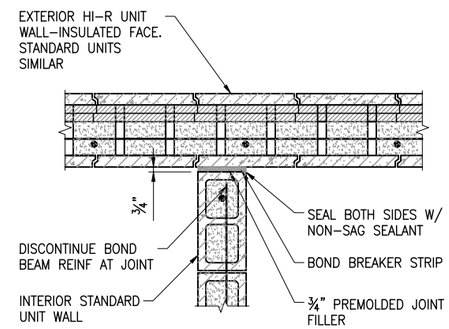

MASONRY CONTROL JOINT

NOT TO SCALE

S 4207

AMERICAN WATER
Military Services
Joint Base Lewis-McChord

BOWEN COLLINS & ASSOCIATES

90% REVIEW

NOT FOR CONSTRUCTION
FOR REVIEW ONLY

NO.	DATE	REV. BY	DESCRIPTION

REVISIONS

AMERICAN WATER (P4-A60/MWA2-00002)
WELL 13 REPLACEMENT
FOR AMERICAN WATER MILITARY SERVICES

VERIFY SCALE
BAR IS ONE INCH ON ORIGINAL DRAWING

REVIEW
CHECKED
APPROVED S. COHEN

DESIGN
DESIGN S. COHEN
DRAWN P. BAXTER

STRUCTURAL
WELL 13
GENERAL STRUCTURAL DETAILS - 3

PROJECT NUMBER 427-22-02
DATE: DECEMBER 2023

DRAWING NO.
GS-05

SHEET 50 OF 60

P:\American Water\427-22-01, 02, 03 JBLM Wells\2.0 Design Phase\2.9 Drawings\sht\Well 13\4272202_GS-05.dwg Plotted: 12/27/2023 1:01 PM By: Preston Baxter

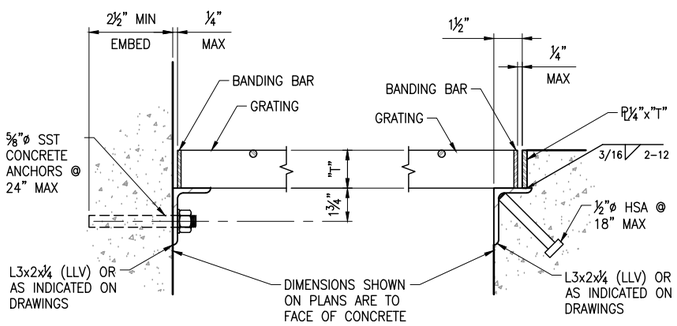

DETAIL NOTES:

1. GRATING DEPTH "T" AS NOTED ON DRAWINGS.
2. ALL EDGES AND OPENINGS ARE TO BE BANDED.
3. WEIGHT OF INDIVIDUAL GRATING SECTION SHALL NOT EXCEED 80 LBS.
4. METAL BEARING BARS ARE TO BE DEPTH "T"x3/16" @ 1 3/16" OC. CROSS BARS ARE TO BE AT 4" OC.
5. PROVIDE A MINIMUM OR 4 CLIPS PER GRATING PANEL AND LOCATE APPROXIMATELY 4" FROM PANEL CORNERS. MAXIMUM SPACING OF CLIPS IS 3'-0".
6. MATERIALS:
   ALUMINUM GRATING – USE ALUMINUM ANGLE SUPPORTS AND STAINLESS STEEL BOLTS AND CLIPS.
   GALVANIZED STEEL GRATING – USE GALVANIZED STEEL SUPPORTS, BOLTS, AND CLIPS. HOT-DIP GALVANIZE AFTER FABRICATION.
   STAINLESS STEEL GRATING – USE 316 STAINLESS STEEL ANGLE SUPPORTS, BOLTS, AND CLIPS.

METAL GRATING

NOT TO SCALE

S
4416

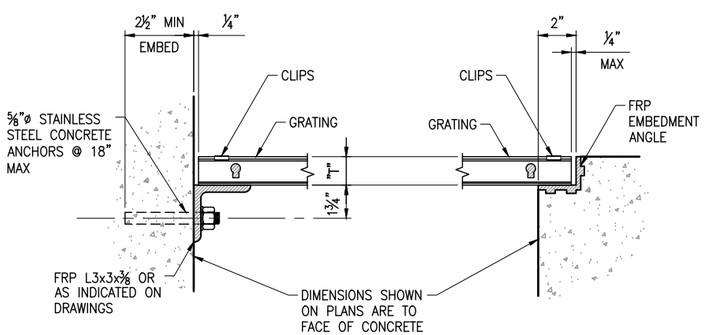

DETAIL NOTES:

1. UNLESS OTHERWISE NOTED ON THE DRAWINGS, ALL GRATING IS FIBERGLASS.
2. GRATING DEPTH "T" AS NOTED ON DRAWINGS.
3. WEIGHT OF INDIVIDUAL GRATING SECTION SHALL NOT EXCEED 80 LBS.
4. BEARING BARS ARE "I" BARS TO BE DEPTH "T"x0.6" @ 1½" OC. TIE BARS ARE TO BE AT 6" OC MAXIMUM.
5. PROVIDE A MINIMUM OR 4 CLIPS PER GRATING PANEL AND LOCATE APPROXIMATELY 4" FROM PANEL CORNERS. MAXIMUM SPACING OF CLIPS IS 3'-0".
6. MATERIALS:
   FRP GRATING – USE PULTRUDED FRP GRATING WITH FRP ANGLE SUPPORTS AND CLIPS AND STAINLESS STEEL BOLTS.

FIBERGLASS GRATING

NOT TO SCALE

S
4420

AMERICAN WATER
Military Services
Joint Base Lewis-McChord

BOWEN COLLINS & ASSOCIATES

90% REVIEW

NOT FOR CONSTRUCTION
FOR REVIEW ONLY

NO.	DATE	REV. BY	DESCRIPTION

REVISIONS

AMERICAN WATER (P4-A60MWA2-00002)
WELL 13 REPLACEMENT
FOR AMERICAN WATER MILITARY SERVICES

VERIFY SCALE
BAR IS ONE INCH ON ORIGINAL DRAWING

REVIEW
CHECKED
APPROVED S. COHEN

DESIGN
DESIGN S. COHEN
DRAWN P. BAXTER

STRUCTURAL
WELL 13
GENERAL STRUCTURAL DETAILS - 4

DATE: DECEMBER 2023
PROJECT NUMBER 427-22-02

DRAWING NO.
GS-06

SHEET 51 OF 60

P:\American Water\427-22-01, 02, 03 JBLM Wells\2.0 Design Phase\2.9 Drawings\sht\Well 13\4272202_GS-06.dwg Plotted: 12/27/2023 1:01 PM By: Preston Baxter

FLUID ABBREVIATION	FUNCTION	PIPING MATERIAL (SEE SCHEDULE AT RIGHT)				FIELD TEST REQUIREMENTS (SEE NOTE 3 AND NOTE 4)		
	THIS LIST INCLUDES SOME LINES NOT USED IN THIS PROJECT	EXPOSED PIPING (SEE NOTE 14)		BURIED PIPING (SEE NOTE 13)		MINIMUM TEST PRESSURE PSI	TEST MEDIUM	LEAKAGE ALLOWANCE (SEE NOTE 2)
		2" DIA & SMALLER	2 ½" DIA & LARGER	2" DIA & SMALLER	2 ½" DIA & LARGER			
A	AERATION	1,16,18	5,11,16,18	1,16,18	5,11,16,18	25	AIR	(A) (D)
AC	ACTIVATED CARBON	16	16	16	16	125	WATER	(A)
AS	ACTIVATED SILICA	6, 16	6, 16	6, 16	6, 16	125	WATER	(A)
AW	FILTER AIR WASH	16	16	16	16	25	AIR	(A)
BR	BRINE SOLUTION	16	16	--	--	125	WATER	(A)
BW	FILTER BACKWASH	--	8	--	8	75	WATER	(A)
CAW	CHANNEL AGITATION WATER	16	16	16	16	25	WATER	(A)
CD	CHEMICAL DRAIN AND VENT	13,17,23	13,17,23	13,17,23	13,17,23	NOTE 7	--	--
CL	CHLORINE (GAS OR LIQUID STATE)	10	--	10	--	300	DRY AIR	(A) (D)
CLS	CHLORINE SOLUTION	14,16	14,16	16	16	125	WATER	(A)
CLV	CHLORINE GAS UNDER VACUUM	20	20	20	20	15 IN. Hg	VACUUM	(A) (E)
CS	CAUSTIC SODA	6	6	6	6	125	WATER	(A)
CT	CALCIUM THIOSULFATE	16, 29	16,29,31	16,29,31	16,29,31	125	WATER	(A)
CV	CHLORINATOR VENT & DETECTION LINE	16	16	16	16	NOTE 8	--	--
CWR	CHILLED WATER RETURN	1*24*	1*	1*24*	1*	125	WATER	(A)
CWS	CHILLED WATER SUPPLY	1*24*	1*	1*24*	1*	125	WATER	(A)
DR	DRAIN	2,16	8,11,12	2,16	8,11,27,55,56	15,NOTE7	WATER	(A)
DW	DEMINERALIZED WATER	16,18	16,18	16,18	16,18	125	WATER	(A)
EE	ENGINER EXHAUST	14*	14*	14	14	NOTE 8	--	--
EWR	ENGINER COOLING WATER RETURN	1*	1*	1*	1*	125	WATER	(A)
EWS	ENGINER COOLING WATER SUPPLY	1*	1*	1*	1*	125	WATER	(A)
FC	FERRIC CHLORIDE	16	16	16	16	125	WATER	(A)
FI	FILTER INFLUENT	--	8	--	8	NOTE 6	WATER	(A)
FOR	FUEL OIL RETURN	9	9	9	9	125	AIR	(A) (D)
FOS	FUEL OIL SUPPLY	9	9	9	9	125	AIR	(A) (D)
FSP	FIRE PROTECTION SPRINKLER SYSTEM	NOTE 10	NOTE 10	NOTE 10	NOTE 10	NOTE 9	WATER	--
FW	FINISHED WATER	2, 24	8	2, 24	8, 28	25	WATER	2, 24(A) 28(B)
HF	HYDROFLUOSILICIC ACID	16	16	16	16	125	WATER	(A)
HR	HEATING WATER RETURN	1*	1*	1*	1*	125	WATER	(A)
HS	HEATING WATER SUPPLY	1*	1*	1*	1*	125	WATER	(A)
HWR	DOMESTIC HOT WATER RETURN	24*	2*	24*	2*	125	WATER	(A)
HWS	DOMESTIC HOT WATER SUPPLY	24*	2*	24*	2*	125	WATER	(A)
IA	INSTRUMENT AIR	24	2	24	2	125	AIR	(A) (D)
LA	LIQUID ALUM	16	16	16	16	125	WATER	(A)
LO	LUBE OIL	9	9	9	9	125	AIR	(A) (D)
LPG	LIQUEFIED PETROLEUM GAS	3	3	3	3	NOTE 7	AIR	--
LS	LIME SLURRY	NOTE 15	NOTE 15	NOTE 15	NOTE 15	NOTE 8	--	--
LSP	LANDSCAPING SPRINKLER SYSTEM	2,16	2,16	2,16	2,16	NOTE 7	--	--
NG	NATURAL GAS	9	9	9	9	NOTE 7	AIR	
OF	OVERFLOW	2,16	8	16	8	25	WATER	(A)
PA	PLANT AIR	7	7	7	7	300	AIR	(A) (D)
PD	PLANT DRAIN	2	8,12	2	8,12,22,28	NOTE 6	WATER	2,8(A) 12,28(B)22(C)
PEA	POLYMER – ANIONIC	16	16	16	16	125	WATER	(A)
PEC	POLYMER – CATIONIC	16	16	16	16	125	WATER	(A)
PEN	POLYMER – NONIONIC	16	16	16	16	125	WATER	(A)
PO	PLANT OVERFLOW	2	8	2	8,28	NOTE 6	WATER	2, 8(A) 28(B)
PP	POTASSIUM PERMANGANATE	6,14,16	6,14,16	6,14,16	6,14,16	125	WATER	(A)
PW	POTABLE WATER	2,16,24	2,8	2,16,24	2,8,11,19,36	125	WATER	2,11,24(A) 19(B)
RW	RAW WATER	2	8	2	8,28	125	WATER	2, 8(A) 28(B)
RWL	RAINWATER LEADER	4,12	4,12	12	12	NOTE 7	--	--
SA	SAMPLE LINE (SEE LIGHT AT RIGHT)	16,18,24	--	16,18,24	--	125	WATER	(A)
SC	SPARE CHEMICAL	16	16	16	16	125	WATER	(A)
SD	SANITARY DRAIN AND VENT	4,12	12	12	12,21	NOTE 7	--	--
SDR	STORM DRAIN	--	8	--	22,27,28,56	NOTE 6	WATER	8(A) 28(B) 22(C)
SH	SODIUM HYPOCHLORITE	16,29,30,31	16,29,30,31	16,29,30,31	16,29,30,31	125	WATER	(A)
SI	SODIUM SILICATE	6, 16	6, 16	6, 16	6, 16	125	WATER	(A)
SL	SLUDGE	16,18	16,18	16,18	12,16,18	50	WATER	16, 18(A) 12(B)
SLT	SALT	--	--	--	--	25	AIR	(A) (D)
SLV	SLEEVE	2,16,24,29	2, 16, 29	2,16,24,29	2, 16, 29	NOTE 7	--	--
SPD	SUMP DISCHARGE	2	26	2	26	50	WATER	(A)
SS	SANITARY SEWER	--	12	--	12,21	NOTE 7	--	
SU	STRUCTURE UNDERDRAIN	--	--	16,21	16,21	--	NO TEXT REQ'D	
SUC	STRUCTURE UNDERDRAIN COLLECTOR	--	12	--	12,21	NOTE 6	WATER	(C)
SW	FILTER SURFACE WASHWATER	14,16,18	8,14,15,16,18	2,16,18	2,8,15,16,18	125	WATER	(A)
TW	TEMPERED WATER	16	16	--	--	125	WATER	(A)
UW	UTILITY WATER (NON–POTABLE WATER)	2,24	2,11	2,24	2,11,19	125	WATER	2,11,24(A) 19(B)
V	VENT	16,24,29	2,16,29	16,24,29	2,16,29	15 IN. Hg	VACUUM	(A) (E)
WLO	WASTE LUBE OIL	9	9	9	9	50	AIR	(A) (D)
WW	FILTER WASTE WASHWATER	--	8	--	8	NOTE 6	WATER	(A)

(* SEE NOTE 5)

LIST OF SAMPLE LINES

PIPE DESIGNATION	SAMPLE POINT

TYPICAL PIPE DESIGNATION:

2" UW (24)

MATERIAL GROUP NUMBER (SEE NOTE 12)

PIPE DIAMETER — FLUID ABBREVIATION

PIPING MATERIAL SCHEDULE (SEE NOTE 4 AND GENERAL NOTE AT RIGHT)

GROUP NO.	PIPE (SEE NOTE 13)	FITTINGS	VALVES, 6 INCHES & SMALLER, SEE NOTE 1, NOTE 11 & NOTE 16)
1	STEEL, ASTM A53, SCHEDULE 40, BLACK WELDED.	2 1/2 INCH AND SMALLER, MALLEABLE IRON, ANSI B16.3, THREADED, BANDED, BLACK, 150 PSI OR STEEL, ANSI B16.9, BUTT–WELDED. 3 INCH AND LARGER, CAST IRON, ANSI B16.1, 125 PSI FLANGED OR MECHANICAL COUPLINGS.	BRONZE, THREADED, GATE, CRANE NO. 428 UB OR STOCKHAM B–105. GLOBE, CRANE NO. 14 1/2 P OR STOCKHAM B–29, CHECK, CRANE NO. 37 OR STOCKHAM B–319. STEEL, LUBRICATED PLUG, ROCKWELL FIG. 142 OR 143 OR POWELL FIG 2200 OR 2201,
2	STEEL, ASTM A53, SCHEDULE 40 WELDED, GALVANIZED.	2 1/2 INCH AND SMALLER, MALLEABLE IRON, ANSI B16.3, THREADED, BANDED, GALVANIZED 150 PSI. 3 INCH AND LARGER, CAST IRON, ANSI B16.1, 125 PSI FLANGED OR MECHANICAL COUPLINGS.	2 1/2 INCH AND SMALLER, ECCENTRIC PLUG, SYNTHETIC RUBBER, FACED, DEZURIK 118S OR HOMESTEAD 1512. BALL, JENKINS NO. 900T, JAMESBURY FIG. 351 3 INCH AND LARGER, ECCENTRIC PLUG–SYNTHETIC RUBBER FACED, DEZURIK 118F OR KEYSTONE 1552 OR 1532 EWG. GATE, AWWA C500. BUTTERFLY, AWWA, FLANGED.
3	STEEL, ASTM A106 OR A53, SCHEDULE 80 SEEMLESS, BLACK.	FORGED STEEL, ANSI B16.11, SOCKET WELDED OR THREADED, BLACK, 2000 PSI, OR STEEL, ANSI B16.9, BUTT–WELDED, SCHEDULE 80.	CAST IRON, LUBRICATED PLUG, NORDSTROM FIG. 214 OR 305.
4	SAME AS GROUP NO. 1	CAST IRON, ANSI B16.12, THREADED, DRAINAGE PATTERN.	--------
5	WELDED STEEL, AWWA C200, UNLINED.	WELDED STEEL, FABRICATED, AWWA C200, UNLINED.	AS INDICATED ON DRAWINGS.
6	STEEL, ASTM A106, OR A53, SCHEDULE 40, SEAMLESS, BLACK.	STEEL, ANSI B16.9, BUTT–WELDED. CAST IRON, ANSI B16.1, 125 PSI, FLANGED. FORGED STEEL, SOCKET WELDED, ANSI B16.11, 2000 PSI OR STEEL, ANSI B16.5, 150 PSI FLANGED.	CAST IRON, FLANGED, LUBRICATED PLUG, NORDSTROM FIG. 143 OR SERCK–AUDCO MSW 133GG.
7	SAME AS GROUP NO. 2.	MALLEABLE IRON, ANSI B16.3, THREADED. BANDED, GALVANIZED, 300 PSI.	BRONZE THREADED, GLOBE, CRANE NO. 212P OR 229C OR STOCKHAM B–62 OR B–32. BALL, JENKINS NO. 900T OR JAMES––BURY FIG. 351, CHECK, CRANE NO. 27 OR STOCKHAM B–322.
8	WELDED STEEL, AWWA C200.	WELDED STEEL, AWWA C200, FABRICATED.	AS INDICATED ON DRAWINGS.
9	SAME AS GROUP NO. 1.	2 1/2 INCH AND SMALLER, MALLEABLE IRON, ANSI B16.3, THREADED, BANDED, BLACK, 150 PSI. 3 INCH AND LARGER, STEEL, ANSI B16.9, BUTT–WELDED	ECCENTRIC PLUG, DEZURIK SERIES 118 OR KEYSTONE 1512, CHECK CRANE NO. 336E OR WALWORTH NO. 904 OR POWELL FIG 668Y. BALL, JENKINS NO. 900T OR JAMESBURY FIG. 351.
10	SAME AS GROUP NO. 3.	1 1/4 INCH AND SMALLER, FORGED STEEL, ANSI B16.11, THREADED OR SOCKET WELDED, BLACK, 3000 PSI, WITH FLANGED AMMONIA UNIONS. 1 1/2 INCH AND LARGER, STEEL, ANSI B16.9, BUTT–WELDED OR FLANGED, SCHEDULE 80	SEMI–PLUG AND YOKE TYPE OR BALL FOR CHLORINE SERVICE, FORGED CARBON STEEL
11	DUCTILE IRON, ANSI A21.51, (AWWA C151) OR CAST IRON ANSI A21.6, 150 PSI, RESTRAINED JOINT TYPE. BELL AND SPIGOT, MECHANICAL JOINTS, MECHANICAL COUPLINGS, OR 125 PSI FLANGED (TYPICAL SERVICE – WATER LINES)	DUCTILE IRON OR CAST IRON, ANSI A21.10, OR AWWA C110, RESTRAINED JOINT TYPE. BELL AND SPIGOT, MECHANICAL COUPLINGS, FLANGED OR MECH. JOINTS, 250 PSI, (PRESSURE RATING) 12 INCHES AND SMALLER, 150 PSI, (PRESSURE RATING) 14 INCHES AND LARGER, WITH 125 PSI ANSI B16.1 FLANGES, AND AW 33 11 00.15	GATE, AWWA C500, '0' RING SEALS, MECHANICAL JOINTS ENDS, MUELLER A–2380–20, OR EDDY–IOWA (CLOW) F–5155. BUTTERFLY, AWWA. ECCENTRIC PLUG, DEZURIK SERIES 118 OR KEYSTONE 1512, OR BALL, PRATT OR W–K–M. RESTRAINED JOINT TYPE.
12	CAST IRON SOIL, ANSI/ASTM A–74, SERVICE WEIGHT, BELL AND SPIGOT OR HUBLESS. AT THE OPTION OF THE CONTRACTOR, DUCTILE IRON (GROUP NO. 11) MAY BE SUBSTITUTED	CAST IRON SOIL, ANSI/ASTM A–74, SERVICE WEIGHT, BELL AND SPIGOT OR HUBLESS. AT THE OPTION OF THE CONTRACTOR, DUCTILE IRON(GROUP NO.11) MAY BE SUBSTITUTED.	AS INDICATED ON DRAWINGS.
13	CORROSION RESISTANT (HIGH SILICON CONTENT) CAST IRON, SERVICE WEIGHT, BELL AND SPIGOT OR HUBLESS.	CORROSION RESISTANT (HIGH SILICON CONTENT) CAST IRON, SERVICE WEIGHT, BELL AND SPIGOT OR HUBLESS.	--------
14	STAINLESS STEEL (TYP)E 316, ASTM A312, SCHEDULE 40S.	STAINLESS STEEL (TYP)E 316 ANSI B16.3, SCREWED, 150 PSI, ANSI B16.9, BUTT–WELDED, SCHEDULE 40S, OR 150 PSI FLANGED.	STAINLESS STEEL, BALL, FLANGED, LADISH NO. 4202, OR JAMESBURY TYPE A/D150F. CHECK, LADISH, NO.5272 OR STOCKHAM FIG. 15 SF 316 OR AS SHOWN ON DRAWINGS.
15	STAINLESS STEEL (TYP)E 316, ASTM A312, SCHEDULE 10S.	STAINLESS STEEL (TYP)E 316 ANSI B16.9 BUTT–WELDED SCHEDULE 10S OR 150 PSI FLANGED.	STAINLESS STEEL, AS INDICATED ON DRAWINGS.
16	POLYVINYL CHLORIDE, SCHEDULE 80, NORMAL IMPACT. ASTM D1785	POLYVINYL CHLORIDE, SCHEDULE 80, NORMAL IMPACT, SOCKET SOLVENT WELD JOINTS, ASTM D2467.	POLYVINYL CHLORIDE, BALL, DIAPHRAGM, BUTTERFLY, BALL OR LIFT CHECK. CHEMTROL, HILLS–MCCANNA OR GSR–R.G. SLOAN CO.
17	POLYPROPYLENE, ASTM D4101, SCHEDULE 40, WITH HEAT FUSED JOINTS.	POLYPROPYLENE, SCHEDULE 40, DRAINAGE TYPE WITH HEAT FUSED SOCKET JOINTS.	--------
18	FIBERGLASS REINFORCED PLASTIC, ASTM D2996, FILAMENT–WOUND, SOCKET AND SPIGOT ENDS, ADHESIVE BONDED.	FIBERGLASS REINFORCED PLASTIC, FILAMENT–WOUND, SOCKET ENDS, ADHESIVE BONDED, OR FIBERGLASS FLANGED.	PLASTIC LINED, FLANGED. FLANGES TO MATCH 150 PSI ANSI B16.5 DIMENSIONS, OR AS INDICATED ON DRAWINGS.
19	POLYVINYL CHLORIDE PRESSURE PIPE ASTM D2241 WITH BELL AND SPIGOT JOINTS.	CAST IRON, 150 PSI, FOR POLYVINYL CHLORIDE PIPE, AWWA C110 CEMENT MORTAR LINED, AWWA C104.	SAME AS GROUP NO. 11
20	POLYETHYLENE TUBING APPROPRIATE FOR CHLORINE GAS SERVICE (KYNAR)	--------	--------
21	POLYETHYLENE, ASTM 03350 TYPE C, CORRUGATED SURFACE	POLYETHYLENE, ASTM 03350, ROTATIONAL MOLDED JOINTS AND FITTINGS.	GEOTEXTILE FILTER FABRIC REQUIRED ON ALL SU LINES.
22	REINFORCED CONCRETE, ASTM C76, TONGUE AND GROOVED JOINTS. (TYPICAL SERVICE–CULVERTS)	SAME AS GROUP NO. 8	--------
23	TEMPERED GLASS. (ARMORED, WHERE BURIED). ANSI/ASTM C599	TEMPERED GLASS DRAINAGE TYPE WITH COMPRESSION COUPLINGS AND TEFLON JOINTS. ANSI/ASTM C599 (ARMORED WHERE BURIED)	--------
24	COPPER, ASTM B88 (TYP)E K, SOFT TEMPERED WHERE BURIED, HARD TEMPERED WHERE EXPOSED.	WROUGHT COPPER OR CAST BRONZE, ANSI B16.22, SOLDER JOINT, 150 PSI, OR COMPRESSION FITTINGS. (FOR OXYGEN PIPING USE SILVER SOLDER, FOR COMPRESSED AIR PIPING USE 95–5 TIN–ANTIMONY SOLDER).	BRONZE,SOLDER JOINT,GLOBE,CRANE NO.1310 OR STOCKHAM B–14. CHECK, CRANE NO. 1342 OR 36, OR STOCKHAM B–309 OR B–345. GATE, CRANE NO. 1320 OR 426, OR STOCKHAM B–104 OR B–105.
25	STEEL, ASTM A106 OR A53, SCHEDULE 40, SEAMLESS, BLACK, SARAN OR POLYPROPYLENE–LINED	STEEL, ANSI B16.5, 150 PSI FLANGED, SARAN OR POLYPROPYLENE–LINED.	CAST STEEL PLUG, DIAPHRAGM OR CHECK, 150 PSI FLANGED, SARAN OR POLYPROPYLENE–LINED.
26	SAME AS GROUP NO. 11 (TYPICAL SERVICE – SLUDGE & SEWAGE LINES)	SAME AS GROUP NO. 11.	ECCENTRIC PLUG, SYNTHETIC RUBBER FACED, DEZURIK 118F OR KEYSTONE 1522. SWING TYPE CHECK,CRANE NO. 383 OR POWELL FIG. 559. BALL, PRATT OR W–K–M.
27	POLYVINYL CHLORIDE GRAVITY SEWER PIPE, ASTM D3034, BELL AND SPIGOT.	POLYVINYL CHLORIDE, ANSI/ASTM D3034, BELL AND/OR SPIGOT.	--------
28	REINFORCED CONCRETE, AWWA C302, CLASS–SEE DRAWINGS. (TYPICAL SERVICE – PRESSURE PIPELINES)	SAME AS GROUP NO. 8.	AS INDICATED ON DRAWINGS.
29	CHLORINATED POLYVINYL CHLORIDE, SCHEDULE 80, ASTM F441	CHLORINATED POLYVINYL CHLORIDE, SCHEDULE 80, SOLVENT SOCKET WELD JOINTS PER ASTM F439 OR FLANGED	CHLORINATED POLYVINYL CHLORIDE, BALL OR DIAPHRAGM
30	POLYVINYL CHLORIDE BRAID REINFORCED FLEXIBLE TUBING	POLYVINYL CHLORIDE, SCHEDULE 80, SOLVENT SOCKET WELD JOINTS ASTM D2467	POLYVINYL CHLORIDE BALL OR DIAPHRAGM
31	DOUBLE CONTAINTMENT POLYVINYL CHLORIDE, ASTM D1785, SCH 80 INSIDE, SCH 40 OUTSIDE	POLYVINYL CHLORIDE, SOLVENT SOCKET WELD JOINTS, ASTM D2467 SCH 80 INSIDE, SCH 40 OUTSIDE	POLYVINYL CHLORIDE BALL OR DIAPHRAGM
32	POLYVINYL CHLORIDE (TYP)E 1, GRADE 1 18 ASTM D1784, AWWA C905	SHORT BODY CAST IRON OR DUCTILE IRON AWWA C110	SAME AS GROUP 11
33	POLYVINYL CHLORIDE (TYP)E 1, GRADE 1 18 ASTM D1784, AWWA C900	SHORT BODY CAST IRON OR DUCTILE IRON AWWA C110. AND, AW 33 11 00.11	SAME AS GROUP 11
34	HIGH DENSITY POLYETHYLENE, AWWA C906 PE 4710	HIGH DENSITY POLYEHTYLENE, AWWA C906, PE 4710, FUSION WELD JOINTS PER ASTM F2620 OR FLANGED	SAME AS GROUP 11, FLANGED
35	PLASTIC PIPE WHICH IS ACCEPTABLE TO QUESTAR GAS COMPANY AND IS IN CONFORMANCE WITH APPLICABLE FEDERAL, STATE, AND LOCAL CODES	--------	--------
36	HIGH DENSITY POLYETHYLENE WATER PIPE PER AWWA C–901, 2 INCHES AND SMALLER, DR–7, 200 PSI, MEETING ASTM PE4710	BRASS COMPRESSION OR PACK–JOINT FITTINGS MEETING AWWA C800. USE BRASS DOUBLE STRAP SERVICE SADDLES WITH CC THREAD.	BRASS CORPORATION STOPS, CURB STOPS PER AWWA C800.
55	DOUBLE – WALL CORRUGATED HDPE, ADS N–12, SLOTTED	FABRICATED OR MOLDED	
56	DOUBLE – WALL CORRUGATED HDPE, ADS N–12	FABRICATED OR MOLDED	

NOTES

GENERAL NOTE
ALTHOUGH SEVERAL PIPING MATERIALS ARE SHOWN THAT MAY BE USED FOR A GIVEN FUNCTION, ONLY THE CALLED OUT PIPING MATERIAL SHOWN ON THE CONSTRUCTION DRAWINGS AND SPECIFICATIONS SHALL BE USED. THE CONTRACTOR DOES NOT HAVE THE OPTION TO USE A DIFFERENT MATERIAL.

CONTACT BETWEEN DISSIMILAR METALS SHALL NOT BE ALLOWED. ANY SUCH CONTACT SHALL BE ISOLATED BY USING INSULATING FLANGE SETS AND/OR BUSHING SETS IN APPROPRIATE LOCATIONS.

NOTE 1
PROPRIETARY NAMES HAVE BEEN QUOTED FOR IDENTIFICATION PURPOSES ONLY. SUBSTITUTIONS WILL BE PERMITTED SUBJECT TO PROVISIONS OF THE SPECIFICATIONS.

NOTE 2
LEAKAGE ALLOWANCE IS AS FOLLOWS:
(A) PIPES SO DESIGNATED SHALL SHOW ZERO LEAKAGE.
(B) PIPES SO DESIGNATED SHALL SHOW ZERO LEAKAGE FOR UNBURIED PIPE AND NOT MORE THAN 0.02 GALLON PER HOUR PER INCH DIAMETER PER 100 FEET OF BURIED PIPE.
(C) PIPES SO DESIGNATED SHALL NOT SHOW A LEAKAGE OF MORE THAN 0.15 GALLON PER HOUR PER INCH OF DIAMETER PER 100 FEET OF PIPE.
(D) PIPES SO DESIGNATED SHALL NOT SHOW A LOSS OF PRESSURE OF MORE THAN 5 PERCENT.
(E) PIPES SO DESIGNATED SHALL NOT SHOW A LOSS OF VACUUM OF MORE THAN 4 INCHES MERCURY COL.

NOTE 3
FOR FIELD TEST PROCEDURES AND ADDITIONAL TEST REQUIREMENTS, SEE PIPING SECTION OF SPECIFICATIONS.

NOTE 4
ANY DEVIATION FROM THE PIPING MATERIALS OR FIELD TEST REQUIREMENTS SHOWN WILL BE NOTED IN THE SPECIFICATIONS OR ON THE DRAWINGS.

NOTE 5
PIPING GROUP NUMBER SHOWN THUS SHALL BE INSULATED, SEE PIPING SECTION OF SPECIFICATIONS FOR INSULATING MATERIALS.

NOTE 6
STATIC WATER TEST WITH SURFACE 5 FEET ABOVE HIGH POINT OF PIPE.

NOTE 7
INSPECTION AND TESTING SHALL BE IN ACCORDANCE WITH APPLICABLE PLUMBING CODE.

NOTE 8
NO APPARENT LEAKS UNDER NORMAL OPERATING CONDITIONS.

NOTE 9
INSPECTION AND TESTING SHALL BE IN ACCORDANCE WITH APPLICABLE NATIONAL FIRE PROTECTION ASSOCIATION STANDARDS.

NOTE 10
PIPING MATERIALS SHALL BE IN ACCORDANCE WITH NATIONAL FIRE PROTECTION ASSOCIATION STANDARDS.

NOTE 11
FOR VALVES 8 INCHES AND LARGER SEE VALVE SCHEDULE. FOR SPECIAL VALVES SEE SPECIFICATIONS.

NOTE 12
CHANGE IN PIPING MATERIAL GROUP NUMBER IS INDICATED THUS:

NOTE 13
FOR PIPE LINING AND COATING, SEE SPECIFICATIONS.

NOTE 14
EXPOSED PIPING SHALL BE PAINTED IN ACCORDANCE WITH SPECIFICATIONS. COLORS TO BE SELECTED BY ENGINEER.

NOTE 15
PIPING MATERIAL SHALL BE NON–ABRASIVE FLEXIBLE RUBBER HOSE AND QUICK CONNECTION COUPLINGS WITH GROUP NO.1 AT EQUIPMENT.

NOTE 16
VALVES 2 1/2 INCH AND SMALLER MAY HAVE SCREWED ENDS VALVES 3 INCH AND LARGER SHALL HAVE FLANGED ENDS, UNLESS OTHERWISE SHOWN OR SPECIFIED. REV. 071195

AMERICAN WATER
Military Services
Joint Base Lewis-McChord

BOWEN COLLINS & ASSOCIATES

90% REVIEW

NOT FOR CONSTRUCTION
FOR REVIEW ONLY

NO.	DATE	REV. BY	DESCRIPTION

REVISIONS

VERIFY SCALE
BAR IS ONE INCH ON ORIGINAL DRAWING

AMERICAN WATER (P4-A60MWA2-00002)
WELL 13 REPLACEMENT
FOR AMERICAN WATER MILITARY SERVICES

REVIEW
CHECKED R. ROCHA
APPROVED J. OLDHAM

DESIGN
DESIGN J. OLDHAM
DRAWN R. GARCIA

GENERAL MECHANICAL DETAILS

PIPE MATERIAL SCHEDULE

PROJECT NUMBER 427-22-02

DATE: MAY 2023

DRAWING NO.
GM-01

SHEET 52 OF 60

P:\American Water\427-22-01, 02, 03 JBLM Wells\2.0 Design Phase\2.9 Drawings\shit\Well 13\4272202_GM-01.dwg Plotted: 12/26/2023 2:21 PM By: Rodolfo Garcia

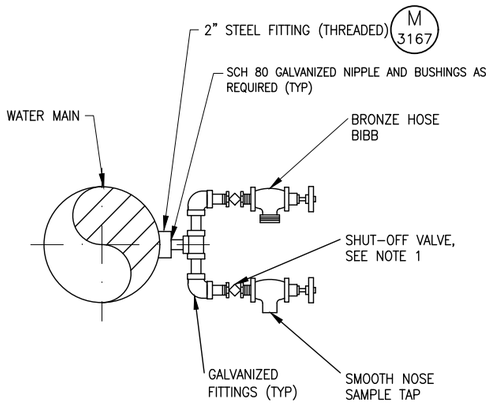

NOTES:

1. ALL HOSE BIBBS TO BE CONTROLLED BY INDIVIDUAL SHUT-OFF VALVES (BALL VALVES) EXCEPT WHERE INDIVIDUALLY CONTROLLED BRANCH MAIN SERVES HOSE BIBBS ONLY.
2. ALL HOSE BIBBS SHALL INCLUDE BACKFLOW PREVENTION VALVE. BACKFLOW PREVENTION VALVE SHALL BE HOSE CONNECTION VACUUM BREAKER TYPE.
3. ROTATE TO OPERATE SIDE BY SIDE AS DIRECTED BY CONSTRUCTION MANAGER.
4. ALL FITTINGS SHALL BE SUITED TO MEET OR EXCEED TEST PRESSURE.

HOSE BIBB AND SAMPLE TAP

SCALE: NTS

M 3138

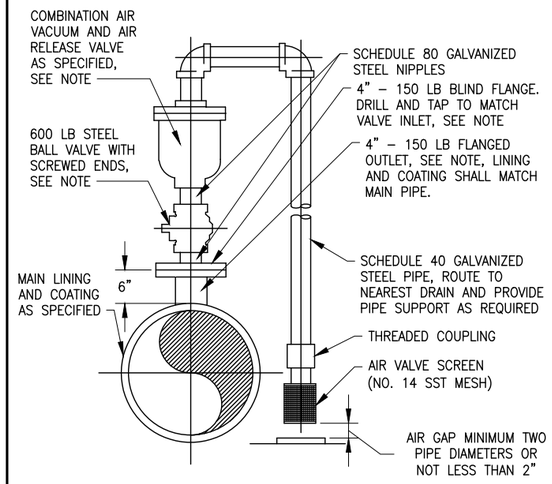

NOTE:
FOR PIPING SYSTEM WITH SERVICE PRESSURE CLASS GREATER THAN 150 PSI. ALL COMPONENTS FURNISHED SHALL BE SUITABLE FOR THE HIGHER PRESSURE.

AIR VACUUM AND AIR RELEASE VALVE ASSEMBLY

SCALE: NTS

M 3143

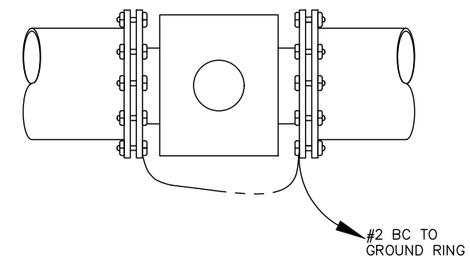

NOTES:

1. METERS SHALL INCLUDE THE FOLLOWING: DRINKING WATER APPROVED LINER AND ENCAPSULATION, STAINLESS STEEL GROUND RINGS, ENCAPSULATED CABLE IN SUFFICIENT LENGTH TO REACH REMOTE MOUNTED CONVERTER WITH NO SPLICING, AND NSF DRINKING WATER CERTIFICATION.
2. REMOTE WALL MOUNTED CONVERTER TO BE MOUNTED IN RTU ENCLOSURE.
3. GROUND CONNECTIONS AND MAKEUP PER MANUFACTURER'S RECOMMENDATIONS.
4. METERS TO BE 4–20 MA HART HART OUTPUT COMPATIBLE.

MAGNETIC FLOW METER

SCALE: NTS

M 3149

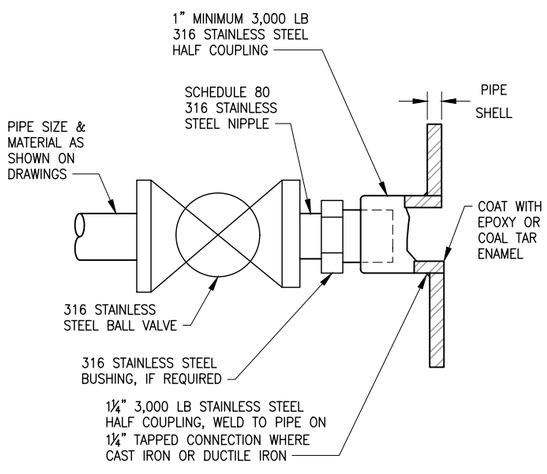

NOTE:
IF PIPE MATERIAL IS STAINLESS STEEL, SAME TYPE MATERIAL ATTACHMENT SHALL BE USED.

PIPE CONNECTION 2 1/2" AND SMALLER

SCALE: NTS

M 3167

INCLUDE PRESSURE INDICATING TRANSMITTER ON EQUIPMENT TREE WHERE INDICATED BY MECHANICAL PLANS. INCLUDE BLOCK & BLEED ASSEMBLY AND SST SNUBBER.

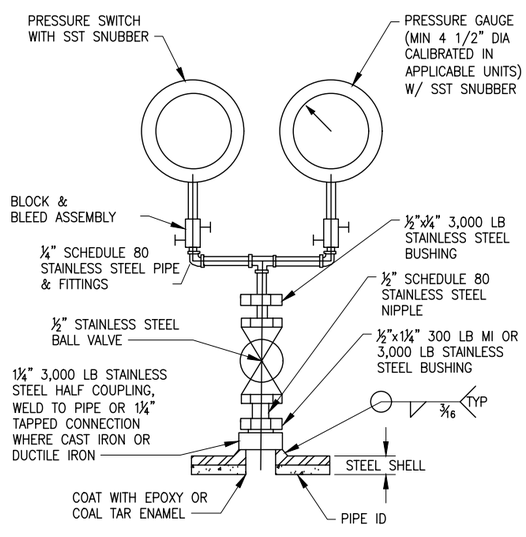

PRESSURE GAUGE AND PRESSURE SWITCH

SCALE: NTS

M 3183

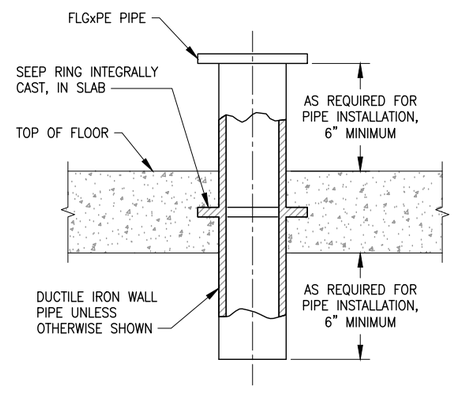

NOTE:
COAT FLOOR PIPE WITH SPECIFIED PAINT SYSTEM PRIOR TO CONCRETE PLACEMENT.

FLOOR PIPE

SCALE: NTS

M 3301

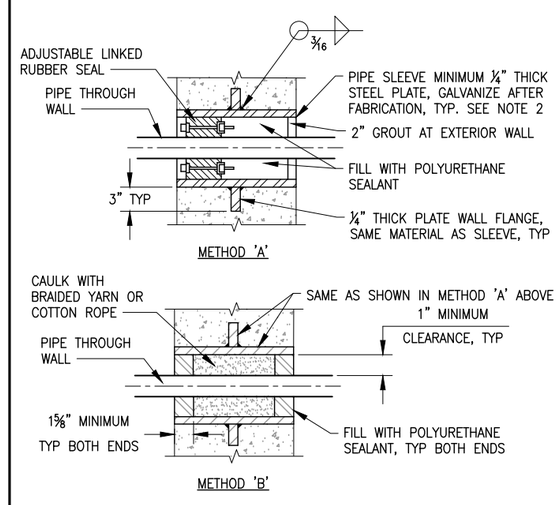

NOTES:

1. FOR WATER BEARING WALLS, USE METHOD 'A' WITH ADJUSTABLE LINKED RUBBER SEAL AT BOTH ENDS.
2. SLEEVES ARE NOT REQUIRED IN CORE DRILLED WALLS, PENETRATIONS THROUGH EXISTING WALLS, OR FLOORS

SLEEVED PIPE OPENING

SCALE: NTS

M 3307

AMERICAN WATER
Military Services
Joint Base Lewis-McChord

BOWEN COLLINS & ASSOCIATES

90% REVIEW

NOT FOR CONSTRUCTION FOR REVIEW ONLY

NO.	DATE	REV. BY	DESCRIPTION

REVISIONS

AMERICAN WATER (P4-A60MWA2-00002)
WELL 13 REPLACEMENT
FOR AMERICAN WATER MILITARY SERVICES

VERIFY SCALE
BAR IS ONE INCH ON ORIGINAL DRAWING

REVIEW
CHECKED R. ROCHA
APPROVED J. OLDHAM

DESIGN
DESIGN J. OLDHAM
DRAWN R. GARCIA

GENERAL MECHANICAL DETAILS -01

GENERAL MECHANICAL DETAILS - 01

DATE: MAY 2023
PROJECT NUMBER 427-22-02

DRAWING NO.
GM-02

SHEET 53 OF 60

P:\American Water\427-22-01, 02, 03 JBLM Wells\2.0 Design Phase\2.9 Drawings\sht\Well 13\427ZZ02_GM-02.dwg Plotted: 12/26/2023 2:21 PM By: Rodolfo Garcia

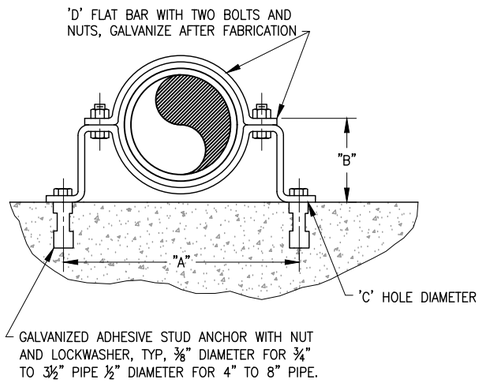

DIMENSION TABLE					
PIPE SIZE	A	B (SEE NOTE 3)	C HOLE DIAMETER	D FLAT BAR SIZE	LOAD RATING LBS *
¾"	5 5/16"	2½"	7/16"	3/16"x1¼"	300
1"	6¼"	2⅝"	7/16"	3/16"x1¼"	300
1¼"	6 1/16"	2¾"	7/16"	3/16"x1¼"	300
1½"	6 15/16"	3"	7/16"	3/16"x1¼"	300
2"	8 15/16"	3 3/16"	7/16"	¼"x1¼"	500
2½"	8⅞"	3 7/16"	7/16"	¼"x1¼"	500
3"	9⅛"	3¾"	7/16"	¼"x1¼"	500
3½"	10 1/16"	4"	7/16"	¼"x1¼"	500
4"	10 9/16"	4¼"	9/16"	¼"x1¼"	600
5"	11¾"	4¾"	9/16"	¼"x1¼"	600
6"	14⅜"	5 5/16"	9/16"	⅜"x1¼"	850
8"	16⅝"	6 5/16"	9/16"	⅜"x1¼"	850

* SAFETY FACTOR OF 5

NOTES:
1. WHERE SUBMERGED, OR WHERE SHOWN ON DRAWINGS, PIPE CLAMP, ANCHOR, SHIELD, NUTS, AND LOCKWASHERS TO BE TYPE 316 STAINLESS STEEL.
2. WHEN USED WITH PVC OR FIBERGLASS PIPE, PROVIDE STEEL SHIELD AROUND PIPE AT CLAMP, WITH LOOSE FIT, WRAP COPPER TUBES WITH 2" STRIP OF RUBBER FABRIC.
3. FOR FLANGED PIPING, INCREASE 'B' DIMENSION AS REQUIRED.

PIPE CLAMP FOR INDIVIDUAL PIPES

SCALE: NTS

M 3372

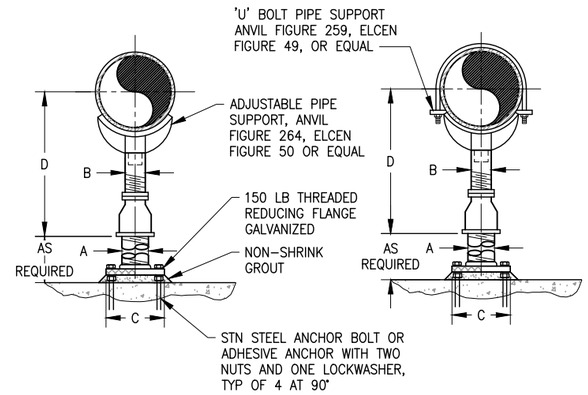

NOTE:
1. ENTIRE UNIT SHALL BE GALVANIZED AFTER FABRICATION.
2. PROVIDE HALF ROUND RIGID INSULATION AND INSULATION PROTECTION SHIELD, SIMILAR TO ANVIL FIGURE 167 OR ELCEN FIGURE 219, WHERE PIPING IS INSULATED.
3. PROVIDE NEOPRENE WAFFLE ISOLATION PAD, SIMILAR TO MASON TYPE "W" OR KORFUND WHEN PIPING IS ISOLATED OR SUPPORT IS ADJACENT TO MECHANICAL EQUIPMENT.
4. FOR BASE, HEIGHT AND FLANGE DIMENSIONS, SEE TABLE.

DIMENSION TABLE					
PIPE SIZE	A	B	C	D	
				MIN	MAX
2½"	2½"	1½"	9"	8"	11½"
3"	2½"	1½"	9"	8¼"	11¾"
3½"	2½"	1½"	9"	8½"	12"
4"	3"	2½"	9"	10¼"	14"
6"	3"	2½"	9"	11⅝"	15¼"
8"	3"	2½"	9"	13⅝"	16½"
10"	3"	2½"	9"	14⅝"	18¼"
12"	3"	2½"	9"	15⅝"	19¾"
14"	4"	3"	11"	18⅞"	20¾"
16"	4"	3"	11"	19⅞"	22¼"
18"	6"	3½"	13½"	21¼"	24"
20"	6"	3½"	13½"	23¼"	25½"
24"	6"	4"	13½"	26½"	28¼"
30"	6"	4"	13½"	29⅝"	31½"
32"	6"	4"	13½"	30⅝"	32¾"
36"	6"	4"	13½"	32⅝"	34¾"

ADJUSTABLE PIPE SUPPORT WITH OR WITHOUT U-BOLT

SCALE: NTS

M 3389

AMERICAN WATER
Military Services
Joint Base Lewis-McChord

BOWEN COLLINS & ASSOCIATES

90% REVIEW

NOT FOR CONSTRUCTION
FOR REVIEW ONLY

NO.	DATE	REV. BY	DESCRIPTION

REVISIONS

AMERICAN WATER (P4-A60/MWA2-00002)
WELL 13 REPLACEMENT
FOR AMERICAN WATER MILITARY SERVICES

VERIFY SCALE
BAR IS ONE INCH ON ORIGINAL DRAWING

REVIEW
CHECKED R. ROCHA
APPROVED J. OLDHAM

DESIGN
DESIGN J. OLDHAM
DRAWN R. GARCIA

GENERAL MECHANICAL DETAILS

GENERAL MECHANICAL DETAILS - 02

DATE: MAY 2023
PROJECT NUMBER 427-22-02

DRAWING NO.
GM-03

SHEET 54 OF 60

P:\American Water\427-22-01, 02, 03 JBLM Wells\2.0 Design Phase\2.9 Drawings\sht\Well 13\4272202_GM-03.dwg Plotted: 12/26/2023 2:21 PM By: Rodolfo Garcia

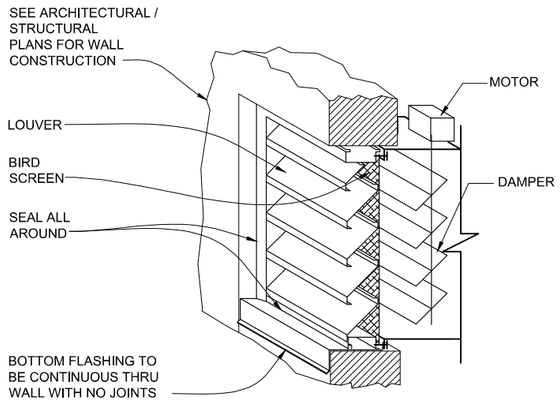

LOUVER DETAIL

NOT TO SCALE

1 / GH-01

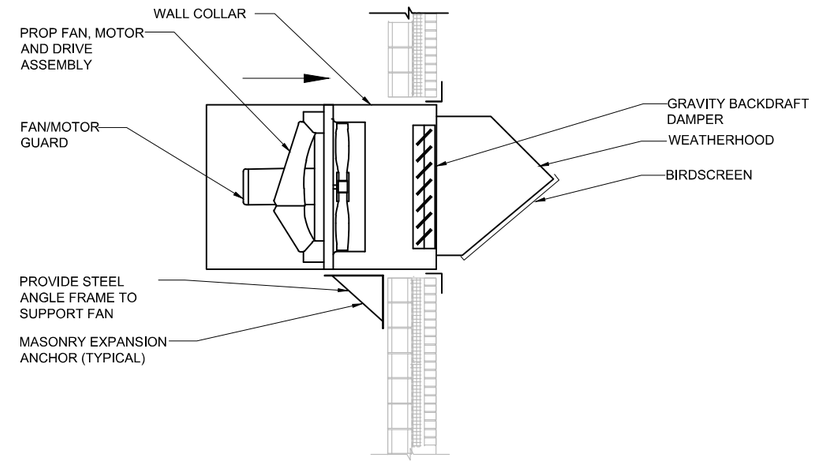

SIDEWALL EXHAUST FAN DETAIL

NOT TO SCALE

2 / GH-01

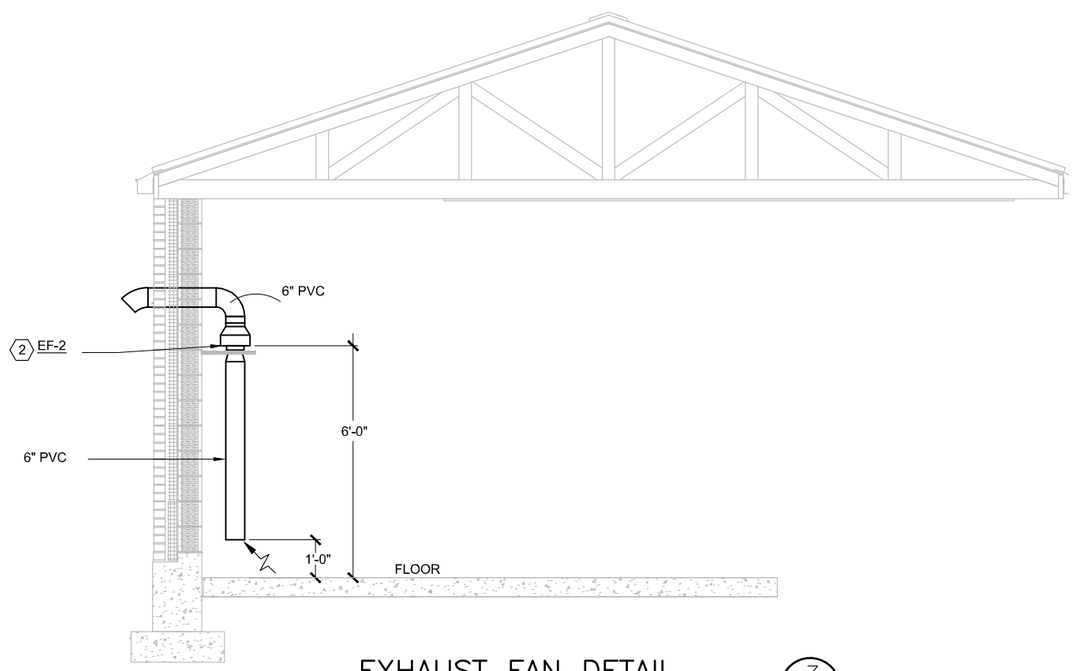

EXHAUST FAN DETAIL

SCALE: 1/4" = 1'-0"

3 / GH-01

AMERICAN WATER
Military Services
Joint Base Lewis-McChord

BOWEN COLLINS & ASSOCIATES

Cushing Terrell
cushingterrell.com
800.757.9522

90% REVIEW

NOT FOR CONSTRUCTION
FOR REVIEW ONLY

NO.	DATE	REV. BY	DESCRIPTION

REVISIONS

AMERICAN WATER
WELL 13 REPLACEMENT
JBLM WASHINGTON

VERIFY SCALE
BAR IS ONE INCH ON ORIGINAL DRAWING

REVIEW
CHECKED L RANKIN
APPROVED L RANKIN

DESIGN
DESIGN L RANKIN
DRAWN J WILSON

PLUMBING
GENERAL
HVAC DETAILS

PROJECT NUMBER 427-22-03

DATE: DECEMBER 2023

DRAWING NO.
GH-01

SHEET 55 OF 60

L:\BCA_JBLM\MSDC\BIMCAD\Mech\4272202_Well-13_GH_01.dwg Plotted: 12/21/2023 3:46 PM By: Jeremy Wilson

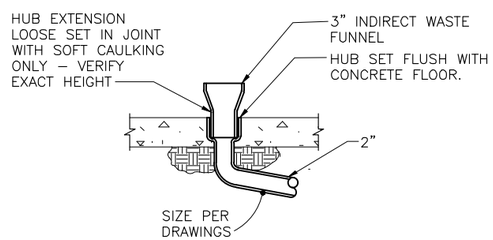

HUB DRAIN DETAIL (2 / GP-01)

NO SCALE

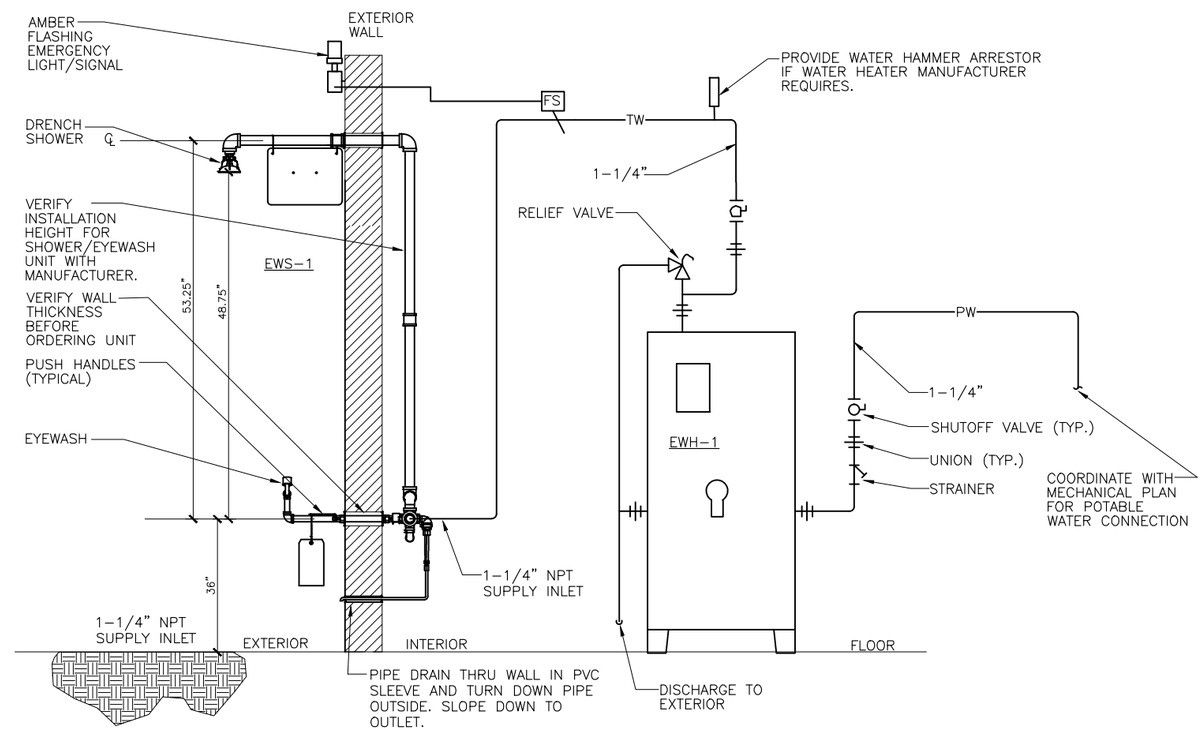

EMERGENCY DRENCH SHOWER/EYEWASH WATER PIPING DETAIL (1 / GP-01)

NOT TO SCALE

AMERICAN WATER Military Services
Joint Base Lewis-McChord

BOWEN COLLINS & ASSOCIATES

Cushing Terrell
cushingterrell.com
800.757.9522

90% REVIEW

NOT FOR CONSTRUCTION FOR REVIEW ONLY

NO.	DATE	REV. BY	DESCRIPTION

REVISIONS

AMERICAN WATER
WELL 13 REPLACEMENT
JBLM WASHINGTON

VERIFY SCALE
BAR IS ONE INCH ON ORIGINAL DRAWING

REVIEW
CHECKED L RANKIN
APPROVED L RANKIN

DESIGN
DESIGN L RANKIN
DRAWN J WILSON

PLUMBING

GENERAL PLUMBING DETAILS

PROJECT NUMBER 427-22-03

DATE: DECEMBER 2023

DRAWING NO.
GP-01

SHEET 56 OF 60

L:\BCA_JBLMISDC\BIMCAD\Plumb\4272202_Well_13_GP_01.dwg Plotted: 12/21/2023 3:46 PM By: Jeremy Wilson

NOTES:

1. MOUNT PANEL OR INDICATION TRANSMITTER AT ABOUT 4' TO 5' ABOVE FINISHED FLOOR UNLESS OTHERWISE SPECIFIED IN DRAWINGS.

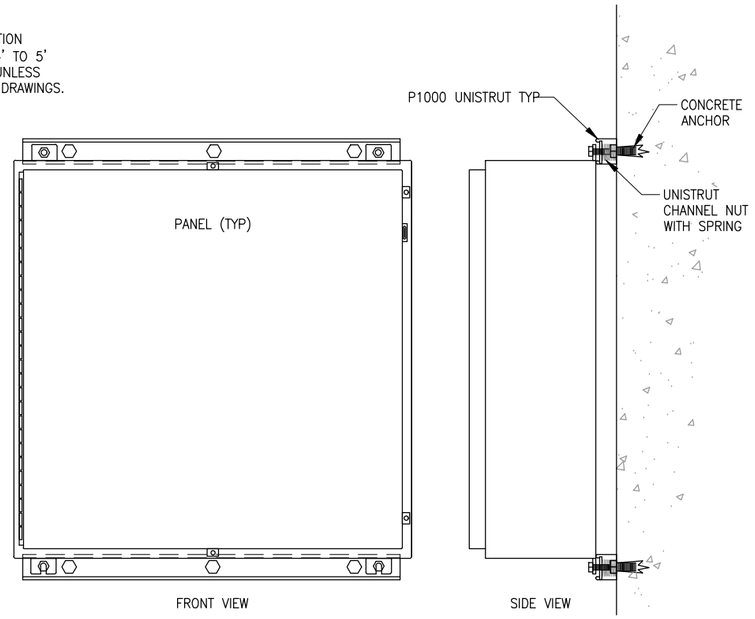

TYPICAL PANEL MOUNTING DETAIL ON WALL

SCALE: NTS

E 5001

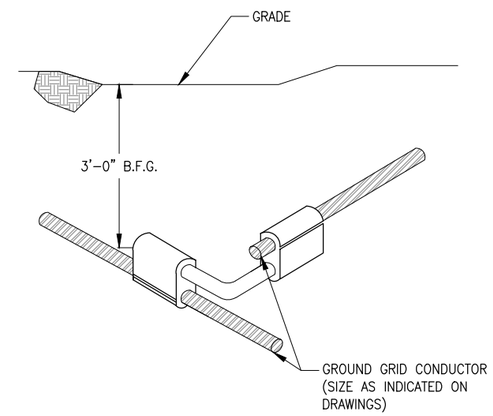

COPPER GROUNDING CABLE CONNECTION COMPRESSION CONNECTION

SCALE: NTS

E 5002

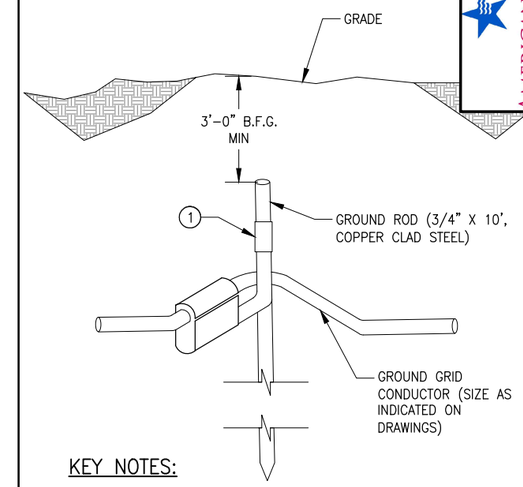

KEY NOTES:

1. GROUND ROD TO GROUND GRID CROSS CONNECTOR. SIZE FOR ROD AND CABLE PER MANUFACTURERS GUIDELINES.

GROUND ROD COMPRESSION INSTALLATION

SCALE: NTS

E 5003

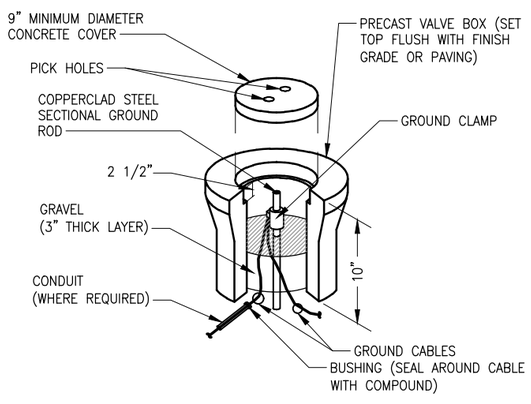

GROUND ROD AND WELL

SCALE: NTS

E 5004

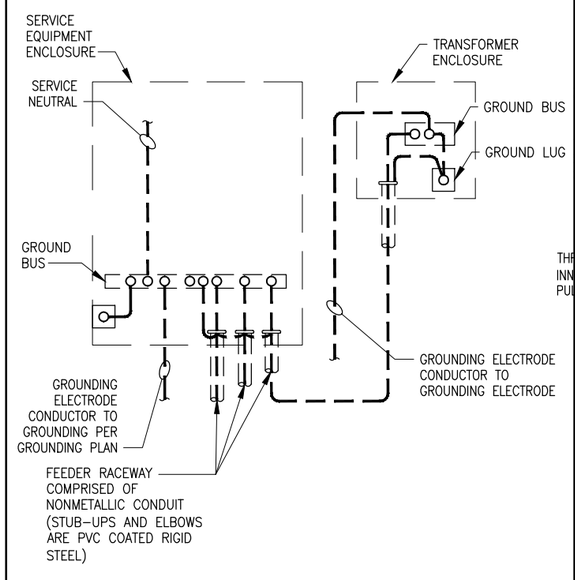

SERVICE AND EQUIPMENT GROUNDING DETAIL

SCALE: NTS

E 5005

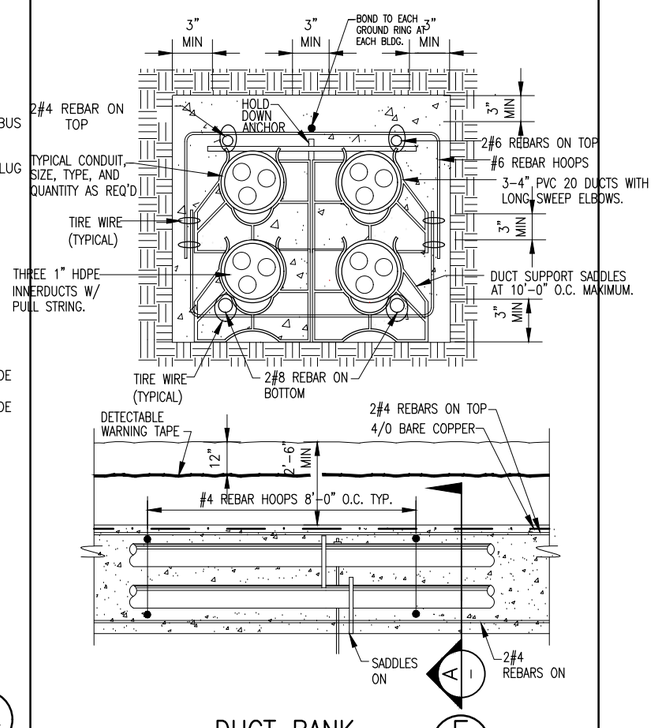

DUCT BANK

SCALE: NTS

E 5010

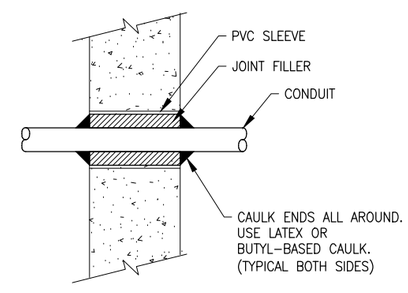

CONDUIT PENETRATION THRU WALL OR SLAB

SCALE: NTS

E 5012

AMERICAN WATER
Military Services
Joint Base Lewis-McChord

BOWEN COLLINS & ASSOCIATES

90% REVIEW

NOT FOR CONSTRUCTION FOR REVIEW ONLY

NO.	DATE	REV. BY	DESCRIPTION

REVISIONS

AMERICAN WATER (P4-A60MWA2-00002)
WELL 13 REPLACEMENT
FOR AMERICAN WATER MILITARY SERVICES

VERIFY SCALE
BAR IS ONE INCH ON ORIGINAL DRAWING

REVIEW
CHECKED D. YOUNGSTROM
APPROVED D. YOUNGSTROM

DESIGN
DESIGN J. LAKE
DRAWN J. LAKE

ELECTRICAL

GENERAL ELECTRICAL DETAILS - 1

DATE: DECEMBER 2023
PROJECT NUMBER 427-22-02

DRAWING NO.
GE-01

SHEET 57 OF 60

P:\AMERICAN WATER\427-22-01, 02, 03 JBLM WELLS\2.0 DESIGN PHASE\2.9 DRAWINGS\SHT\WELL 13\4272202_GE-01.dwg Plotted: 12/28/2023 12:46 AM By: Josh Lake

NOTES:

1. SUPPLIED BY INTEGRATOR

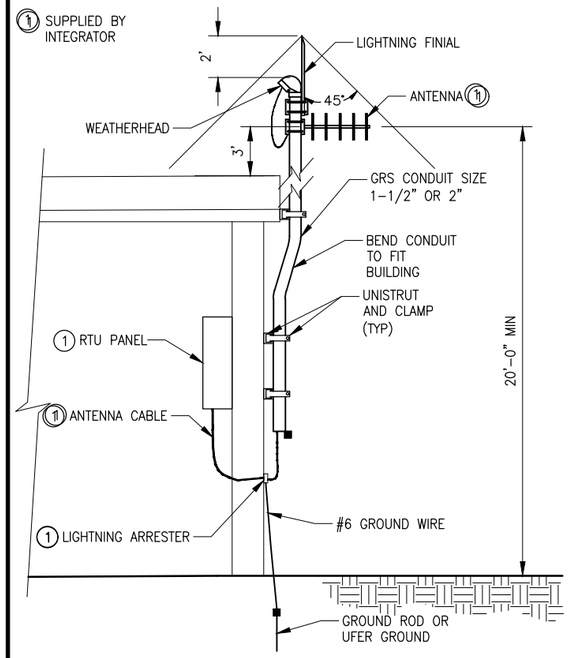

ANTENNA SUPPORT DETAIL TYP

SCALE: NTS

E 5100

NOT USED

SCALE: NTS

E 50XX

NOTES:

1. REFER TO GENERAL NOTES ON DRAWING E-03 FOR GROUND GRID INFORMATION.
2. THIS DETAIL ONLY APPLIES TO SAGE WELL II. THIS DETAIL DOES NOT APPLY TO WELL 13.

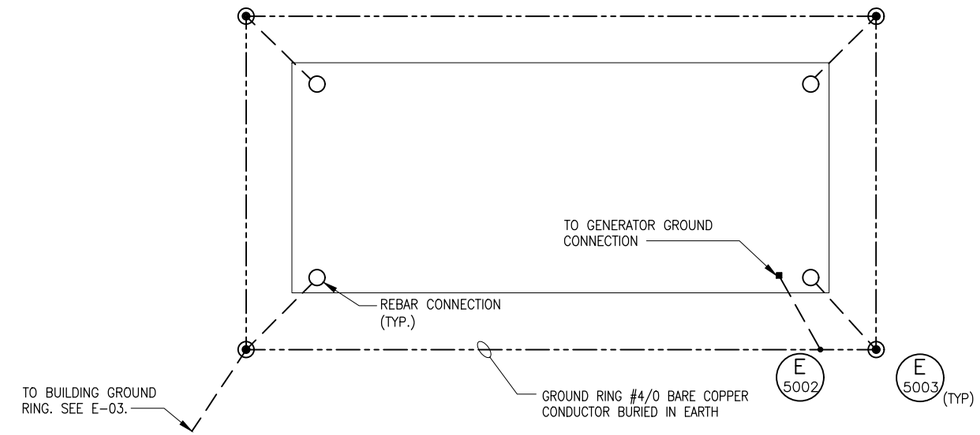

GENERATOR GROUND RING DETAIL

SCALE: NTS

E 5202

NOTES:

1.LUGGED AND BOLTED, INSULATED WITH 1/2 LAPPED LAYER OF VARNISHED CAMBRIC TAPE AND TWO 1/2 LAPPED LAYER OF VINYL PLASTIC ELECTRICIANS TAPE WITH IRREGULAR SURFACES PADDED PER SPEC. (TYPICAL FOR NON STAR-DELTA STARTED MOTORS)

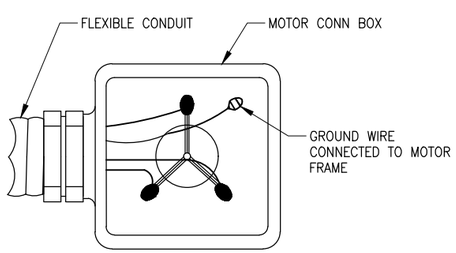

MOTOR GROUND

SCALE: NTS

E 5260

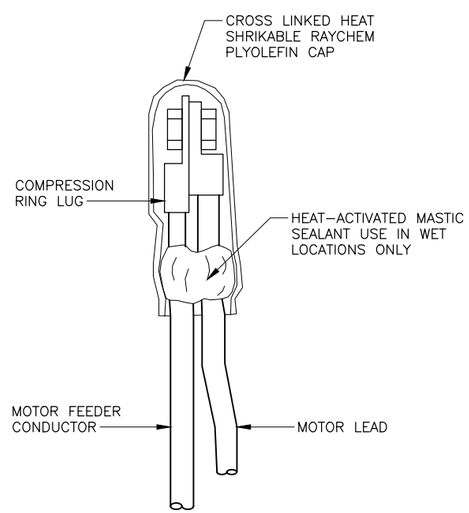

TYPICAL MOTOR LEAD TERMINATION

SCALE: NTS

E 5261

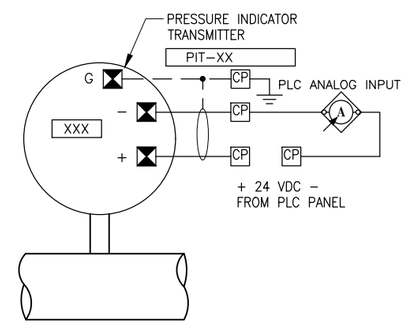

LEGEND:

XX - TAG NUMBER

CP - CONTROL PANEL TERMINALS

- PRESSURE TRANSMITTER TERMINALS

PRESSURE TRANSMITTER SCHEMATIC

SCALE: NTS

E 5360

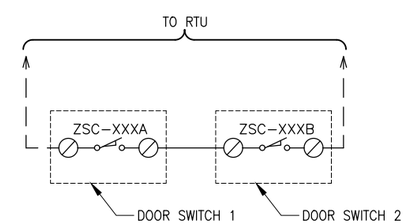

TYPICAL DOOR INTRUSION SWITCHES DIAGRAM

SCALE: NTS

E 5362

AMERICAN WATER
Military Services
Joint Base Lewis-McChord

BOWEN COLLINS & ASSOCIATES

90% REVIEW

NOT FOR CONSTRUCTION FOR REVIEW ONLY

NO.	DATE	REV. BY	DESCRIPTION

REVISIONS

VERIFY SCALE
BAR IS ONE INCH ON ORIGINAL DRAWING

AMERICAN WATER (P4-A60MWA2-00002)
WELL 13 REPLACEMENT
FOR AMERICAN WATER MILITARY SERVICES

REVIEW
CHECKED D. YOUNGSTROM
APPROVED D. YOUNGSTROM

DESIGN
DESIGN J. LAKE
DRAWN J. LAKE

ELECTRICAL

GENERAL ELECTRICAL DETAILS - 2

DATE: DECEMBER 2023
PROJECT NUMBER 427-22-02

DRAWING NO.
GE-02

SHEET 58 OF 60

P:\AMERICAN WATER\427-22-01, 02, 03 JBLM WELLS\2.0 DESIGN PHASE\2.9 DRAWINGS\SHT\WELL 13\4272201_GE-02.dwg Plotted: 1/9/2024 10:15 AM By: Cameron Wasden

KEY NOTES:

1. GROUND FLOW METER PRIMARY AS REQUIRED BY MANUFACTURER.
2. CABLE BY VENDOR OR RECOMMENDED BY VENDOR.

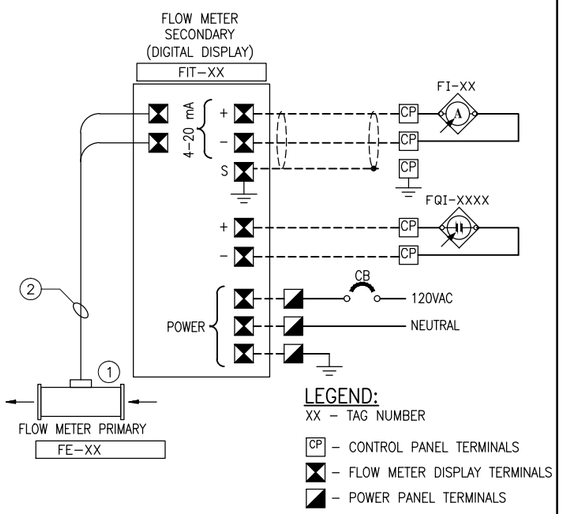

LEGEND:

XX – TAG NUMBER

CP – CONTROL PANEL TERMINALS

– FLOW METER DISPLAY TERMINALS

– POWER PANEL TERMINALS

TYPICAL FLOW METER SCHEMATIC

SCALE: NTS

E 5585

NOT USED

SCALE: NTS

E 50XX

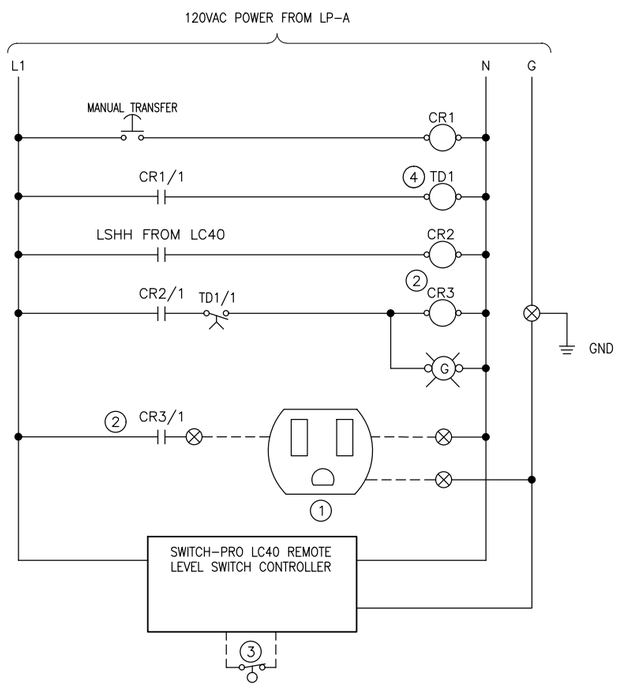

KEY NOTES:

1. 20 AMP SIMPLEX RECEPTACLE FOR TRANSFER PUMP.
2. TRANSFER PUMP RELAY SHALL BE MOTOR DUTY RATED FOR THE CHLORINE TRANSFER PUMP LOAD.
3. DAY TANK HIGH LEVEL SWITCH.
4. COORDINATE SELECTION OF TIME DELAY RELAY WITH ACTUATOR OPERATING TIME (APPROXIMATELY 10 SECONDS).

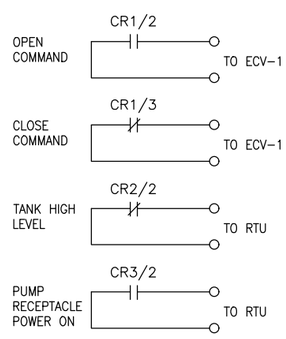

TRANSFER PUMP CONTROL DIAGRAM

SCALE: NTS

E 5601

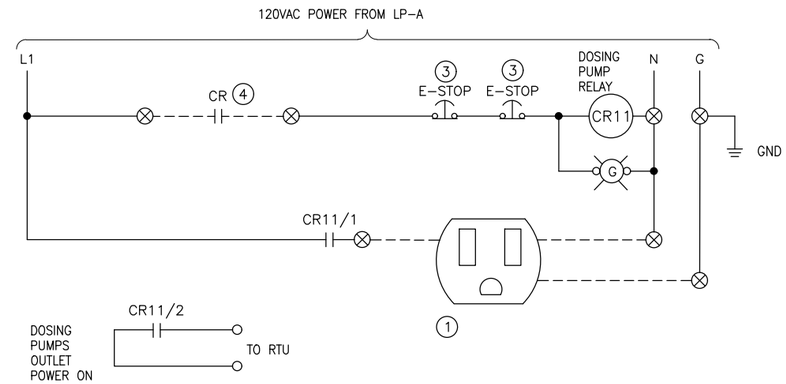

DOSING PUMPS CONTROL PANEL AND OUTLET

NOTES:

A. METERING PUMPS MOUNTED IN LOCATIONS SHOWN ON THE ELECTRICAL PLANS.

B. LABEL ALL PUMP CONTROL STATIONS AND DEDICATED RECEPTACLES. COORDINATE WITH AW–JBLM ELECTRICIAN FOR LABELING CRITERIA.

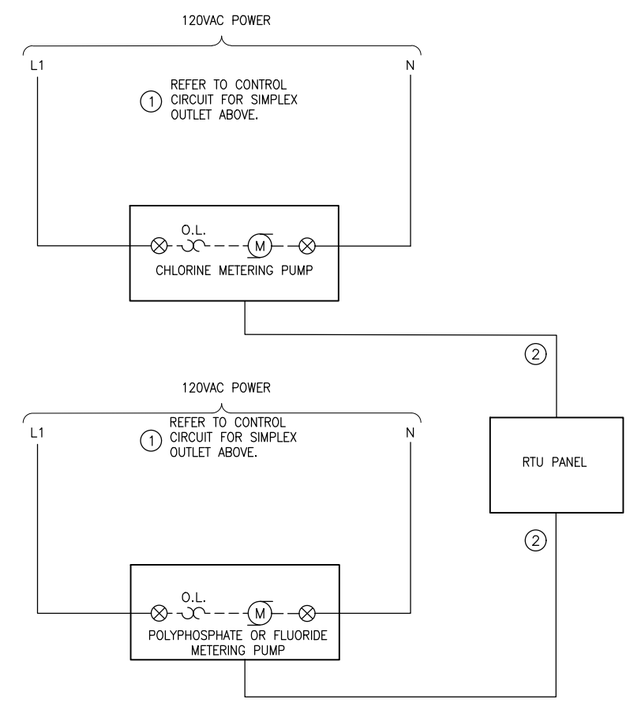

KEY NOTES:

1. OUTLET AND CORD/PLUG FOR METERING PUMP SHALL BE A NON–STANDARD RECEPTACLE AND PLUG TYPE WITHOUT USING AN ADAPTOR. METERING PUMP IS INTERCONNECTED WITH THE WELL PUMP AND ONLY "HOT" WHEN THE WELL PUMP IS OPERATING. (SEE KEY NOTE #4.) METERING PUMP SHALL HAVE SIMPLEX RECEPTACLE.
2. START COMMAND SIGNAL TO METERING PUMPS WILL BE A CONTACT CLOSURE IN THE RTU PANEL AND AN ANALOG 4 TO 20 MA FLOW SIGNAL TO METERING PUMPS FROM RTU. REFER TO THE CONTROL BLOCK DIAGRAM.
3. MAINTAINED NEMA TYPE 4 E–STOP PUSHBUTTONS FOR CHLORINE AND FLUORIDE METERING PUMPS. SEE POWER PLAN FOR LOCATIONS. ONLY ONE E–STOP PUSHBUTTON REQUIRED FOR POLYPHOSPHATE PUMP, AND IT SHALL BE MOUNTED ON FRONT OF CONTROL PANEL.
4. CONTROL RELAY LOCATED IN PUMP CONTROL PANEL. RELAY CONTACT CLOSES WHEN THE WELL PUMP IS RUNNING.

CHEMICAL PUMPS WIRING DIAGRAM

SCALE: NTS

E 5602

AMERICAN WATER Military Services Joint Base Lewis-McChord

BOWEN COLLINS & ASSOCIATES

90% REVIEW

NOT FOR CONSTRUCTION FOR REVIEW ONLY

NO.	DATE	REV. BY	DESCRIPTION

REVISIONS

AMERICAN WATER (P4-A60/MWA2-00002)

WELL 13 REPLACEMENT

FOR AMERICAN WATER MILITARY SERVICES

VERIFY SCALE

BAR IS ONE INCH ON ORIGINAL DRAWING

REVIEW

CHECKED D. YOUNGSTROM

APPROVED D. YOUNGSTROM

DESIGN

DESIGN J. LAKE

DRAWN J. LAKE

ELECTRICAL

GENERAL ELECTRICAL DETAILS - 3

PROJECT NUMBER 427-22-02

DATE: DECEMBER 2023

DRAWING NO. GE-03

SHEET 59 OF 60

P:\AMERICAN WATER\427-22-01, 02, 03 JBLM WELLS\2.0 DESIGN PHASE\2.9 DRAWINGS\SHT\WELL 13\4272201_GE-03.dwg Plotted: 12/28/2023 12:47 AM By: Josh Lake

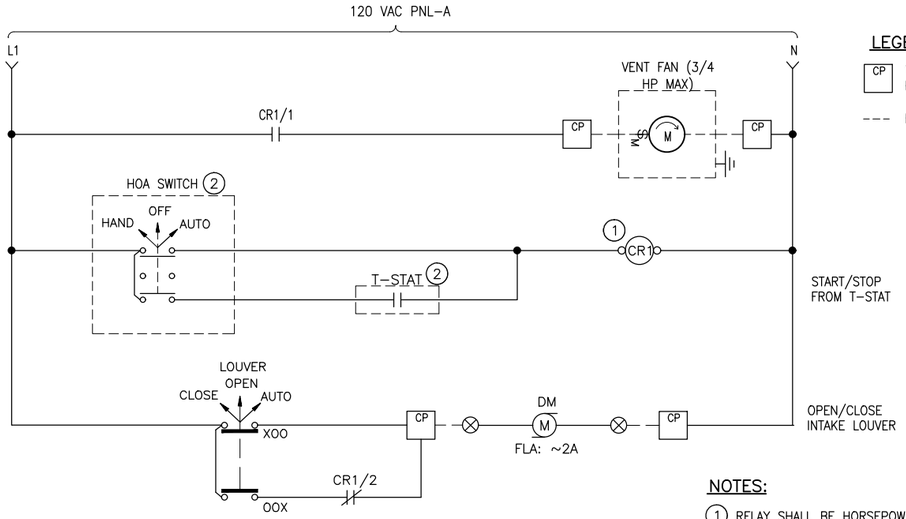

LEGEND:

CP — VENTILATION CONTROL PANEL TERMINALS

--- EXTERNAL CONNECTION

NOTES:

1. RELAY SHALL BE HORSEPOWER RATED FOR SPECIFIC VENT FAN MOTOR.
2. HAND-OFF-AUTO CONTROL AND T-STAT SHALL ONLY BE PROVIDED FOR PUMP ROOM VENTILATION. ON-OFF CONTROL ONLY SHALL BE PROVIDED FOR CHEMICAL ROOMS.

VENTILATION CONTROL PANEL SCHEMATIC

SCALE: NTS

E / 5604

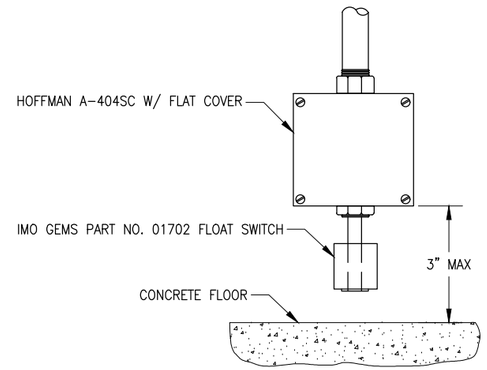

FLOOR HIGH WATER ALARM LEVEL SWITCH DETAIL

SCALE: NTS

I / 6121

NOTES:

1. JUNCTION BOX.
2. LIQUID TIGHT CORD CONNECTOR.
3. CONDUIT TO CONTROL PANEL.
4. CABLE BY VENDOR.
5. MAGNETIC DOOR SWITCH ADEMCO 960, SENTROL 2505A, GRI4400, NASCOM 505A OR EQUIVALENT.
6. 1½" WIDE MAXIMUM GAP.
7. DOOR HANGER

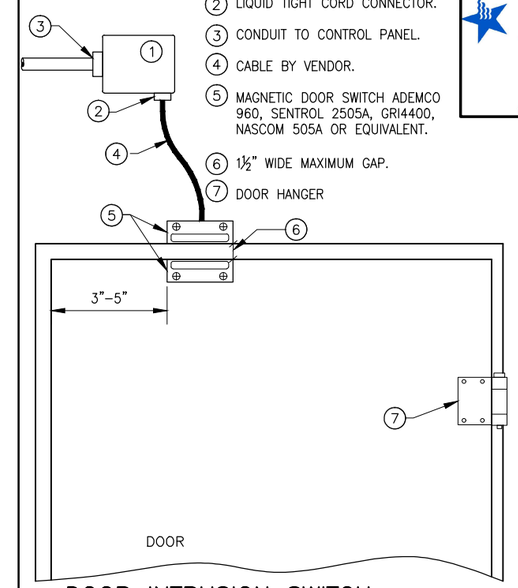

DOOR INTRUSION SWITCH INSTALLATION DETAIL

SCALE: NTS

I / 6160

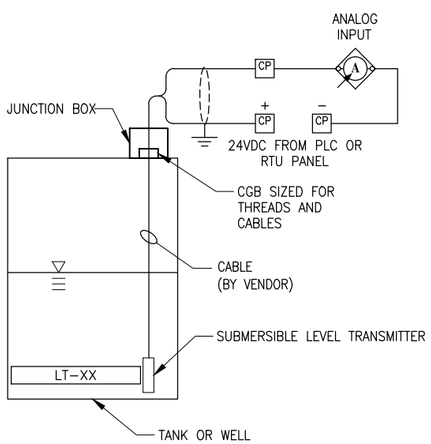

LEGEND:

XX – TAG NUMBER

CP – CONTROL PANEL TERMINALS

TYPICAL SUBMERSIBLE LEVEL TRANSDUCER

SCALE: NTS

I / 6222

NOT USED

SCALE: NTS

E / 50XX

NOT USED

SCALE: NTS

E / 50XX

NOT USED

SCALE: NTS

E / 50XX

AMERICAN WATER Military Services Joint Base Lewis-McChord

BOWEN COLLINS & ASSOCIATES

90% REVIEW

NOT FOR CONSTRUCTION FOR REVIEW ONLY

NO.	DATE	REV. BY	DESCRIPTION

REVISIONS

AMERICAN WATER (P4-A60MWA2-00002)

WELL 13 REPLACEMENT

FOR AMERICAN WATER MILITARY SERVICES

VERIFY SCALE

BAR IS ONE INCH ON ORIGINAL DRAWING

REVIEW

CHECKED D. YOUNGSTROM

APPROVED D. YOUNGSTROM

DESIGN

DESIGN J. LAKE

DRAWN J. LAKE

ELECTRICAL

GENERAL ELECTRICAL DETAILS - 4

PROJECT NUMBER 427-22-02

DATE: DECEMBER 2023

DRAWING NO. GE-04

SHEET 60 OF 60

P:\AMERICAN WATER\427-22-01, 02, 03 JBLM WELLS\2.0 DESIGN PHASE\2.9 DRAWINGS\SHT\WELL 13\427\2201_GE-04.dwg Plotted: 12/28/2023 12:48 AM By: Josh Lake